wieland

gesis®

EASY PLUG IN

Pluggable electrical installation
for indoors.

HELLO
WIELAND ELECTRIC

Over 100 years of safe connections.

As the inventor of safe electrical connection technology,
we are committed to individual and safe system solutions.

Together with our broad product portfolio we offer comprehensive services for industry applications as well as building installation and lighting technology. This experience amounts to Wieland being the global market leader for pluggable, electrical installations in commercial buildings and a dependable partner for machine safety. Our solutions are designed for the secure safety of your team, ensuring that integration of our system is fast and easy while saving time and cost. Thanks to our modular solutions your requirements can be satisfied in a fast, flexible and fail-safe way.

We operate worldwide with subsidiaries, production facilities and sales partners and have an excellent global network. Our specialist teams are supporting customers and projects across the globe - personally and individually. Our competences in engineering, production and logistics processes are interlinked with each other for maximum efficiency.

We look forward to exploring all partnership opportunities with you.

1910
founded in Bamberg

1600 +
employees worldwide

6
production sites

70 +
countries worldwide

CONTENTS

gesis® CLASSIC	Introduction – GST18® codings		6
	GST18i3	Plug connectors, device connectors, distributors and intermediate couplings, cable assemblies, 3-pole	8
	GST18i4	Plug connectors, device connectors, distributors and intermediate couplings, cable assemblies, 4-pole	34
	GST18i5	Plug connectors, device connectors, distributors, cable assemblies, 5-pole	48
	GST18i6	Plug connectors, device connectors, distributors, cable assemblies, 6-pole	68
	GST18®	Mounting materials, accessories, distributor boxes	73
gesis® MINI	Introduction – GST15 codings		78
	GST15i2	Plug connectors, device connectors, distributors and intermediate couplings, cable assemblies, 2-pole	80
	GST15i3	Plug connectors, device connectors, distributors and intermediate couplings, cable assemblies, 3-pole	89
	GST15i4	Plug connectors, device connectors, cable assemblies, 4-pole	97
	GST15i5	Plug connectors, device connectors, distributors and intermediate couplings, cable assemblies, 5-pole	104
	GST15	Mounting materials	114
gesis® MICRO	Introduction – GST08 codings		116
	GST08i2	Device connectors, distributors, cable assemblies, 2-pole	118
	GST08i3	Distributors, cable assemblies, 3-pole	126
gesis® NV	Introduction		130
	BST14i2	Plug connectors, device connectors, distributors, cable assemblies, 2-pole	132
	BST14i3	Plug connectors, device connectors, distributors, cable assemblies, 3-pole	138
	BST	Cover pieces	143
gesis® NRG	Introduction		144
	Flat cables, 5-pole and 5+2-pole		146
	Flat cable feeds and taps, 2-pole, 3-pole, and 5-pole		148
	Accessories		151
Country-specific products	United Kingdom		154
Facts & Data	General technical data, safety instructions, installation instructions, technical data		190
Index			230
Information and contacts			250

Information relating to operating limits, instructions, and materials used can be found under Facts & Data.

BUILDING INSTALLATION – **SIMPLY PLUG IN** – PERFECT!

gesis® – one name, one idea, an inimitable story of success.

Over 40 years ago, the foundations were laid for a revolution in electrical installation with the predecessor of our current GST18® installation plug connector system. Time-consuming screw-type clamping units were replaced with robust contacts that enabled electrical connections to the electrical installation to be established and separated again quickly, easily, and safely.

SINCE THEN, WIELAND ELECTRIC GMBH HAS SET MANY STANDARDS IN BUILDING INSTALLATION:

+ Active creation of the product standard that defines installation plug connectors
+ Expansion of the system to include plug connectors, device connectors, distribution blocks, and industrially fabricated and tested connection cables
+ Establishment of a color and mechanical coding system so that different applications can be distinguished between safely and mismating is avoided
+ Special customized solutions that allow even exceptional applications to be realized

MODULAR SYSTEM

The GST18® system now comprises in excess of 3,000 standard articles, which together facilitate the basic idea of quick, easy, and safe installation for any modern building installation requirement.

APPLICATIONS IN MANY BRANCHES

There are now more than 5 billion gesis® contacts in use worldwide in a vast range of applications, and the gesis® system consists of several product groups. The basic idea of saving 70% time and 30% costs is proving persuasive.

40+ YEARS GESIS®

GESIS® CLASSIC **QUICK** AND EASY.

Industrially prefabricated and durable components. Boasting an impressive 70% time saving and 30% cost saving! The comprehensive GST18® product range enables simple, cost-effective, and future-proof electrical installation, from the distribution unit to the consumer.

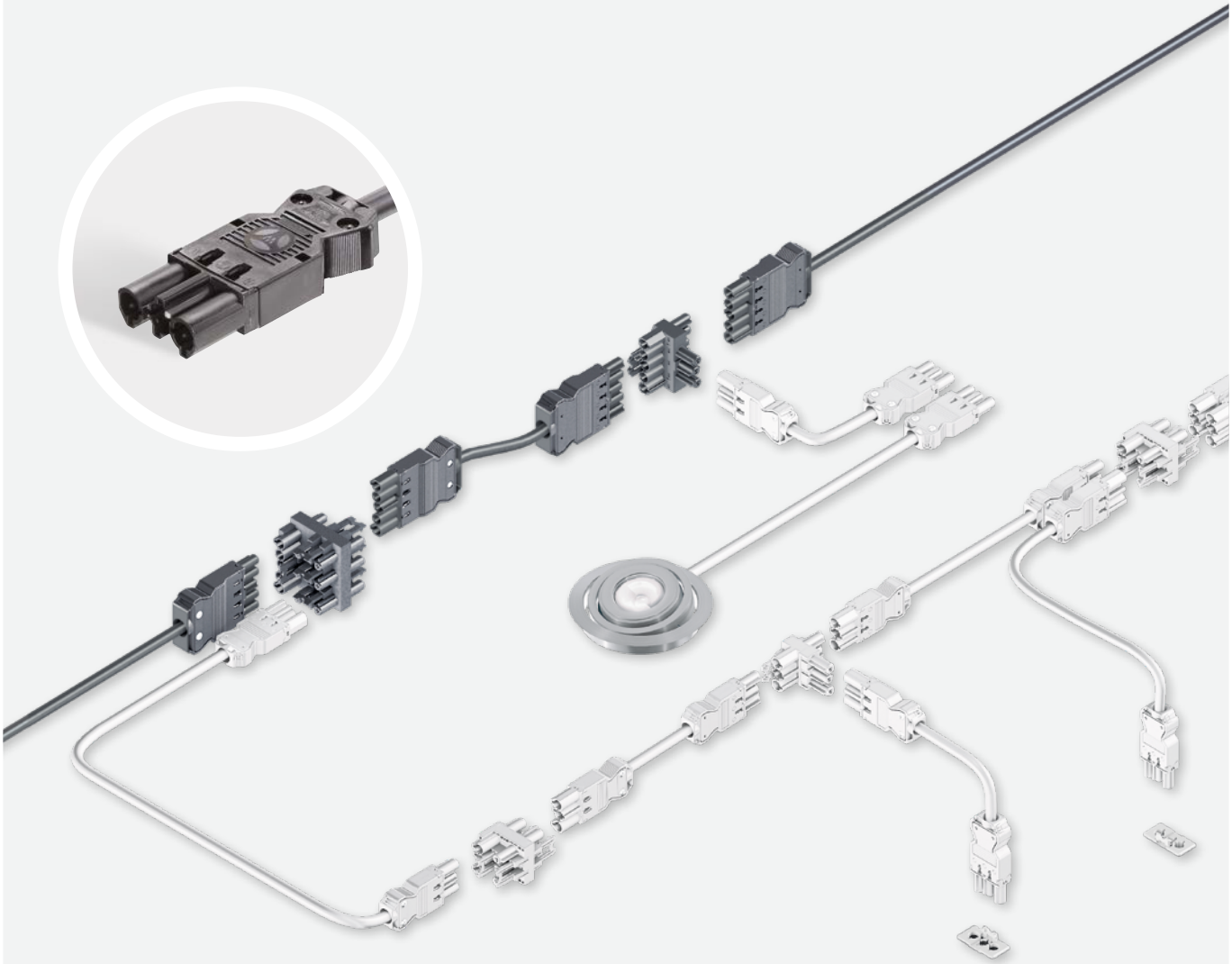

FEATURES

+ 3, 4, 5 and 6-pole
+ 20A rated current
+ Quick, easy, and safe installation for any fixed installation requirement

CODING OF **GST18® CONNECTORS**

GST18i3

Code 1	Code 2	Code 3	Code 4	Code 5	Code 6	Code 7
L, N, PE	L, N, PE	L, N, PE	1, 2, 3	1, 2, 3	1, 2, 3	1, PE, 2/N
white **black**	**pebble gray** **tomato red**	**salmon red**	**brown**	**pastel blue**	**turquoise blue**	**may green**
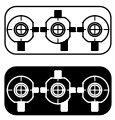	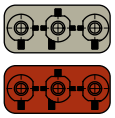	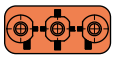	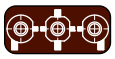	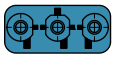	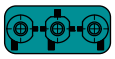	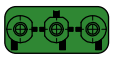
Application	**Application**	**Application**	**Application**	**Application**	**Application**	**Application**
Mains voltage	Mains voltage (e.g. UPS)	Mains voltage	Switching appli-cation	non-SELV (e.g. DALI)	customized (without PE)	customized (with PE)

GST18i4

Code 1	Code 2	Code 3
2, N, PE, 1	2, N, PE, 1	1, 2/N, 3, 4
white **black**	**pebble gray** **tomato red**	**turquoise blue**
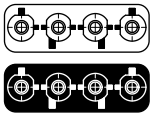	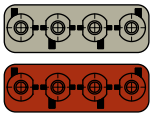	
Application	**Application**	**Application**
Mains voltage	Mains voltage (e.g. UPS)	customized (without PE)

GST18i6

Code 4	Code 1
1, PE, 2/N, 3	1, 2, 3, L, N, PE
may green	**pastel blue/black**
Application	**Application**
customized (with PE)	Mains 250 V + dimming + emergency

GST18i5

Code 1	Code 2	Code 3	Code 4	Code 5	Code 6
3, N, PE, 2, 1	L, N, PE, D2, D1	3, N, PE, 2, 1	1, 2, PE, 3/N, 4	1, 2, 3, 4/N, 5	1, 2, 3, 4, 5
white **black**	**pastel blue**	**pebble gray** **tomato red**	**may green**	**turquoise blue**	**light blue**
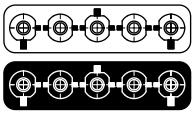	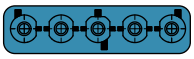	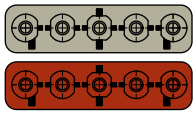	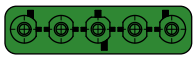	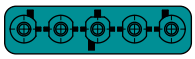	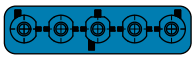
Application	**Application**	**Application**	**Application**	**Application**	**Application**
Mains voltage	Mains voltage 250 V + non-SELV (e.g. DALI)	Mains voltage (e.g. UPS)	customized (with PE)	customized (without PE)	Low voltage/SELV (50 V)

GST18I3, CONNECTOR, 3-POLE

SCREW CONNECTION

TECHNICAL DATA

Rated voltage:	250 V	Cross section fine-stranded:	0,75 mm² - 2,5 mm²
Rated current:	20 A	Connection cross section solid:	0,75 mm² - 2,5 mm²
Degree of protection (IP):	IP20	Additional technical data, see facts & data.	
Terminations per pole:	1		
Lockable:	self-locking (unlocking by tool)		

female **male**

for cables Ø 6.5-10.5 mm

Color of coding	Application	Marking of poles	female Art.No.	male Art.No.
■ black	mains 250 V	L, N, PE	92.931.3053.1	92.932.3053.1
□ white	mains 250 V	L, N, PE	92.931.3053.0	92.932.3053.0
■ salmon pink	mains 250 V	L, N, PE	92.931.3653.0	92.932.3653.0
■ brown	switch funktion 250 V	1, 2, 3	92.931.3853.0	92.932.3853.0
■ pastel blue	not SELV	1, 2, 3	92.931.3753.0	92.932.3753.0
■ pebble grey	UPS 250 V	L, N, PE	92.931.3453.0	92.932.3453.0
■ tomato red	UPS 250 V	L, N, PE	92.931.3453.5	92.932.3453.5
■ may green	customized (with PE)	1, PE, 2/N	92.931.3553.0	92.932.3553.0
■ turquoise blue	customized (without PE)	1, 2, 3	92.931.4053.0	92.932.4053.0
□ no-flame white	no-flame acc. IEC 60335-1	L, N, PE	92.931.3057.0	92.932.3057.0

TECHNICAL DATA

Rated voltage:	250 V	Cross section fine-stranded:	0,75 mm² - 4 mm²
Rated current:	20 A	Connection cross section solid:	0,75 mm² - 4 mm²
Degree of protection (IP):	IP20	Additional technical data, see facts & data.	
Terminations per pole:	1		
Lockable:	self-locking (unlocking by tool)		

female **male**

for cables Ø 10.5-14.5 mm

Color of coding	Application	Marking of poles	female Art.No.	male Art.No.
■ black	mains 250 V	L, N, PE	92.931.5053.1	92.932.5053.1
□ white	mains 250 V	L, N, PE	92.931.5053.0	92.932.5053.0
■ salmon pink	mains 250 V	L, N, PE	92.931.5653.0	92.932.5653.0
■ brown	switch funktion 250 V	1, 2, 3	92.931.5853.0	92.932.5853.0
■ pebble grey	UPS 250 V	L, N, PE	92.931.5353.0	92.932.5353.0
■ tomato red	UPS 250 V	L, N, PE	92.931.5353.5	92.932.5353.5
■ may green	customized (with PE)	1, PE, 2/N	92.931.5553.0	92.932.5553.0
■ turquoise blue	customized (without PE)	1, 2, 3	92.931.6053.0	92.932.6053.0

Technical changes reserved

GST18I3, CONNECTOR, 3-POLE

SPRING CLAMP CONNECTION

TECHNICAL DATA

Rated voltage:	250 V	Cross section fine-stranded:	0,75 mm² - 1,5 mm²
Rated current:	20 A	Connection cross section solid:	0,75 mm² - 2,5 mm²
Degree of protection (IP):	IP20	Additional technical data, see facts & data.	
Terminations per pole:	2		
Lockable:	self-locking (unlocking by tool)		

female

male

for cables Ø 7.8-10.3 mm

Color of coding	Application	Marking of poles	female Art.No.	male Art.No.
■ black	mains 250 V	L, N, PE	92.933.0053.1	92.934.0053.1
□ white	mains 250 V	L, N, PE	92.933.0053.0	92.934.0053.0
■ salmon pink	mains 250 V	L, N, PE	92.933.0553.0	92.934.0553.0
■ brown	switch funktion 250 V	1, 2, 3	92.933.0453.0	92.934.0453.0
■ pebble grey	UPS 250 V	L, N, PE	92.933.0153.0	92.934.0153.0
■ tomato red	UPS 250 V	L, N, PE	92.933.0153.5	92.934.0153.5
■ may green	customized (with PE)	1, PE, 2/N	92.933.0753.0	92.934.0753.0
■ turquoise blue	customized (without PE)	1, 2, 3	92.933.0653.0	92.934.0653.0

GST18I3, CONNECTOR, 3-POLE

INSULATION DISPLACEMENT CONNECTION

TECHNICAL DATA			
Rated voltage:	250 V	Cross section fine-stranded:	1,5 mm² - 2,5 mm²
Rated current:	20 A	Connection cross section solid:	1,5 mm² - 2,5 mm²
Degree of protection (IP):	IP20	Additional technical data, see facts & data.	
Terminations per pole:	1		
Lockable:	self-locking (unlocking by tool)		

female

for cables Ø 5.5-12 mm — **female**

Color of coding	Application	Marking of poles	Art.No.
☐ white	mains 250 V	L, N, PE	92.731.6053.0

Technical changes reserved

GST18I3, DEVICE CONNECTOR, 3-POLE

SCREW CONNECTION

TECHNICAL DATA

Rated voltage:	250 V	Cross section fine-stranded:	0,75 mm² - 4 mm²
Rated current:	20 A	Connection cross section solid:	0,75 mm² - 4 mm²
Degree of protection (IP):	IP20	Additional technical data, see facts & data.	
Terminations per pole:	1		
Lockable:	self-locking (unlocking by tool)		

female **male**

built-in component, single screw connection

Color of coding	Application	Marking of poles	female Art.No.	male Art.No.
■ black	mains 250 V	L, N, PE	92.031.3258.1	92.032.3358.1
□ white	mains 250 V	L, N, PE	92.031.3258.0	92.032.3358.0
■ salmon pink	mains 250 V	L, N, PE	92.031.3658.0	92.032.3658.0
■ brown	switch funktion 250 V	1, 2, 3	92.031.3858.0	92.032.3858.0
■ pastel blue	not SELV	1, 2, 3	92.031.3758.0	92.032.3758.0
■ pebble grey	UPS 250 V	L, N, PE	92.031.3458.0	92.032.3458.0
■ tomato red	UPS 250 V	L, N, PE	92.031.3458.5	92.032.3458.5
■ may green	customized (with PE)	1, PE, 2/N	92.031.3558.0	92.032.3558.0
■ turquoise blue	customized (without PE)	1, 2, 3	92.031.3958.0	92.032.3958.0
□ no-flame white	no-flame acc. IEC 60335-1	L, N, PE	92.031.3257.0	92.032.3357.0
■ no-flame pastel blue	no-flame acc. IEC 60335-1	1, 2, 3	92.031.3757.0	92.032.3757.0

TECHNICAL DATA

Rated voltage:	250 V	Cross section fine-stranded:	0,75 mm² - 4 mm²
Rated current:	20 A	Connection cross section solid:	0,75 mm² - 4 mm²
Degree of protection (IP):	IP20	Additional technical data, see facts & data.	
Terminations per pole:	2		
Lockable:	self-locking (unlocking by tool)		

female

built-in component, double screw connection

Color of coding	Application	Marking of poles	female Art.No.
■ black	mains 250 V	L, N, PE	92.031.4453.1
□ white	mains 250 V	L, N, PE	92.031.4453.0
■ salmon pink	mains 250 V	L, N, PE	92.031.4953.0
■ pebble grey	UPS 250 V	L, N, PE	92.031.4853.0

TECHNICAL DATA

Rated voltage:	250 V	Cross section fine-stranded:	0,75 mm² - 4 mm²
Rated current:	20 A	Connection cross section solid:	0,75 mm² - 4 mm²
Degree of protection (IP):	IP20	Additional technical data, see facts & data.	
Terminations per pole:	1		
Lockable:	self-locking (unlocking by tool)		

female **male**

snap-in, housing material thickness 0.5-1.5 mm

Color of coding	Application	Marking of poles	female Art.No.	male Art.No.
■ black	mains 250 V	L, N, PE	92.031.8758.1	92.032.8758.1
□ white	mains 250 V	L, N, PE	92.031.8758.0	92.032.8758.0

GST18I3, DEVICE CONNECTOR, 3-POLE

SCREW CONNECTION

TECHNICAL DATA

Rated voltage:	250 V	Cross section fine-stranded:	0,5 mm² - 4 mm²
Rated current:	20 A	Connection cross section solid:	0,5 mm² - 4 mm²
Degree of protection (IP):	IP20	Additional technical data, see facts & data.	
Terminations per pole:	1		
Lockable:	self-locking (unlocking by tool)		

female **male**

snap-in, housing material thickness 1.5-2.5 mm			female	male
Color of coding	**Application**	**Marking of poles**	**Art.No.**	**Art.No.**
☐ white	mains 250 V	L, N, PE	92.031.7758.0	92.032.7758.0

SPRING CLAMP CONNECTION

TECHNICAL DATA

Rated voltage:	250 V	Cross section fine-stranded:	0,5 mm² - 1,5 mm²
Rated current:	20 A	Connection cross section solid:	0,5 mm² - 2,5 mm²
Degree of protection (IP):	IP20	Additional technical data, see facts & data.	
Terminations per pole:	2		
Lockable:	self-locking (unlocking by tool)		

female **male**

snap-in, housing material thickness 0.5-1.5 mm			female	male
Color of coding	**Application**	**Marking of poles**	**Art.No.**	**Art.No.**
■ black	mains 250 V	L, N, PE	92.031.9658.1	92.032.9658.1
☐ white	mains 250 V	L, N, PE	92.031.9658.0	92.032.9658.0
■ salmon pink	mains 250 V	L, N, PE	92.031.8558.0	92.032.8558.0
■ brown	switch funktion 250 V	1, 2, 3	92.031.8458.0	92.032.8458.0
■ pebble grey	UPS 250 V	L, N, PE	92.031.9758.0	92.032.9758.0
■ tomato red	UPS 250 V	L, N, PE	92.031.9758.5	92.032.9758.5
■ may green	customized (with PE)	1, PE, 2/N	92.031.8058.0	92.032.8058.0
■ turquoise blue	customized (without PE)	1, 2, 3	92.031.8258.0	92.032.8258.0

TECHNICAL DATA

Rated voltage:	250 V	Cross section fine-stranded:	0,5 mm²
Rated current:	20 A	Connection cross section solid:	0,5 mm² - 2,5 mm²
Degree of protection (IP):	IP20	Additional technical data, see facts & data.	
Terminations per pole:	2		
Lockable:	self-locking (unlocking by tool)		

female **male**

snap-in, housing material thickness 1.5-2.5 mm			female	male
Color of coding	**Application**	**Marking of poles**	**Art.No.**	**Art.No.**
■ black	mains 250 V	L, N, PE	92.031.7658.1	92.032.7658.1
☐ white	mains 250 V	L, N, PE	92.031.7658.0	92.032.7658.0
■ no-flame black	no-flame acc. IEC 60335-1	L, N, PE	92.031.7657.1	92.032.7657.1

Technical changes reserved

GST18I3, DEVICE CONNECTOR, 3-POLE

SOLDERING CONNECTION

TECHNICAL DATA

Rated voltage:	250 V	Terminations per pole:	1
Rated current:	20 A	Lockable:	self-locking (unlocking by tool)
Degree of protection (IP):	IP20		

Additional technical data, see facts & data.

female **male**

solder connector, horizontal, without fastening flange			female	male
Color of coding	**Application**	**Marking of poles**	**Art.No.**	**Art.No.**
■ black	mains 250 V	L, N, PE	92.033.0058.1	92.034.0058.1
□ white	mains 250 V	L, N, PE	92.033.0058.0	92.034.0058.0
■ salmon pink	mains 250 V	L, N, PE	92.033.0758.0	
■ brown	switch funktion 250 V	1, 2, 3	92.033.0658.0	92.034.0658.0
■ pastel blue	not SELV	1, 2, 3	92.033.0458.0	92.034.0458.0
■ pebble grey	UPS 250 V	L, N, PE	92.033.0158.0	92.034.0158.0
■ tomato red	UPS 250 V	L, N, PE	92.033.0158.5	92.034.0158.5
□ no-flame white	no-flame acc. IEC 60335-1	L, N, PE	92.033.0057.0	92.034.0057.0

female **male**

solder connector, vertical, without fastening flange			female	male
Color of coding	**Application**	**Marking of poles**	**Art.No.**	**Art.No.**
■ black	mains 250 V	L, N, PE	92.031.0058.1	92.032.0058.1
□ white	mains 250 V	L, N, PE	92.031.0058.0	92.032.0058.0
■ salmon pink	mains 250 V	L, N, PE	92.031.0758.0	
■ brown	switch funktion 250 V	1, 2, 3	92.031.0658.0	92.032.0658.0
■ pastel blue	not SELV	1, 2, 3	92.031.0458.0	92.032.0458.0
■ pebble grey	UPS 250 V	L, N, PE	92.031.0158.0	92.032.0158.0
■ tomato red	UPS 250 V	L, N, PE	92.031.0158.5	92.032.0158.5

GST18I3, DISTRIBUTOR, 3-POLE

TECHNICAL DATA			
Rated voltage:	250 V	Lockable:	self-locking (unlocking by tool)
Rated current:	20 A		
Degree of protection (IP):	IP20	Additional technical data, see facts & data.	

h-distributor, without fastening option

Color of coding	Application	Marking of poles	Art.No.
■ black	mains 250 V	L, N, PE	92.030.6053.1
□ white	mains 250 V	L, N, PE	92.030.6053.0

H-distributor, with fastening option to 07.413.6853.1/0

Color of coding	Application	Marking of poles	Art.No.
■ black	mains 250 V	L, N, PE	92.030.6953.1
□ white	mains 250 V	L, N, PE	92.030.6953.0
■ salmon pink	mains 250 V	L, N, PE	92.030.7553.0
■ pebble grey	UPS 250 V	L, N, PE	92.030.7053.0
■ tomato red	UPS 250 V	L, N, PE	92.030.7053.5
■ may green	customized (with PE)	1, PE, 2/N	92.030.7253.0
■ turquoise blue	customized (without PE)	1, 2, 3	92.030.7153.0

HH-distributor, with fastening option to 07.413.6853.1/0

Color of coding	Application	Marking of poles	Art.No.
■ black	mains 250 V	L, N, PE	92.030.0953.1
□ white	mains 250 V	L, N, PE	92.030.0953.0

switch module, with fastening option to 07.413.6853.1/0

Application	Marking of poles	Art.No.
On/Off	1, 2, 3	92.030.0053.1
Motion detector	1, 2, 3	92.030.0153.1
Two-way circuit	1, 2, 3	92.030.0253.1
Series switch	1, 2, 3	92.030.0353.1

T-distributor, with fastening option to 07.413.6853.1/0, cascadable

Color of coding	Application	Marking of poles	Art.No.
■ black	mains 250 V	L, N, PE	92.030.3153.1
□ white	mains 250 V	L, N, PE	92.030.3153.0
■ pebble grey	UPS 250 V	L, N, PE	92.030.3653.0
■ tomato red	UPS 250 V	L, N, PE	92.030.3653.5

T-distributor, without mounting option, cascadable

Color of coding	Application	Marking of poles	Art.No.
■ black	mains 250 V	L, N, PE	92.030.3053.1
□ white	mains 250 V	L, N, PE	92.030.3053.0
■ pebble grey	UPS 250 V	L, N, PE	92.030.3553.0
■ tomato red	UPS 250 V	L, N, PE	92.030.3553.5

T-distributor flat, male left, without fastening option

Color of coding	Application	Marking of poles	Art.No.
■ black	mains 250 V	L, N, PE	92.030.1253.1
□ white	mains 250 V	L, N, PE	92.030.1253.0

Technical changes reserved

GST18I3, DISTRIBUTOR, 3-POLE

TECHNICAL DATA			
Rated voltage:	250 V	Lockable:	self-locking (unlocking by tool)
Rated current:	20 A		
Degree of protection (IP):	IP20	Additional technical data, see facts & data.	

T-distributor flat, male right, without fastening option

Color of coding	Application	Marking of poles	Art.No.
■ black	mains 250 V	L, N, PE	92.030.1353.0

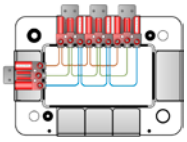

distributor box, IN GST18i3, OUT 3 x GST18i3

Color of coding	Application	Marking of poles	Art.No.
■ salmon pink	mains 250 V	L, N, PE	99.317.0028.0

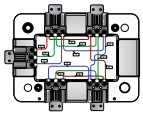

distributor box, IN GST18i3, OUT 4 x GST18i3

Color of coding	Application	Marking of poles	Art.No.
■ black	mains 250 V	L, N, PE	99.297.0028.0

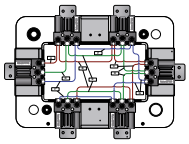

distributor box, IN GST18i3, OUT 5 x GST18i3

Color of coding	Application	Marking of poles	Art.No.
■ black	mains 250 V	L, N, PE	99.234.0028.0
□ white	mains 250 V	L, N, PE	99.188.0028.0
■ salmon pink	mains 250 V	L, N, PE	99.189.0028.0

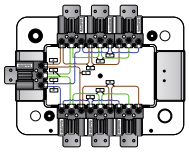

distributor box, IN GST18i3, OUT 6 x GST18i3

Color of coding	Application	Marking of poles	Art.No.
■ black	mains 250 V	L, N, PE	99.293.0028.0
□ white	mains 250 V	L, N, PE	99.294.0028.0
■ pebble grey	mains 250 V	L, N, PE	99.279.0028.0

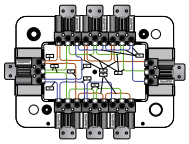

distributor box, IN GST18i3, OUT 7 x GST18i3

Color of coding	Application	Marking of poles	Art.No.
■ black	mains 250 V	L, N, PE	99.238.0028.0
■ salmon pink	mains 250 V	L, N, PE	99.300.0028.0

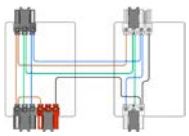

distributor box, IN GST18i3, OUT 2 x GST18i3 black, 1 x GST18i3 brown aund 1 x GST18i4 white

Color of coding	Application	Marking of poles	Art.No.
■ black	switch funktion 250 V	L, N, PE	99.503.0028.0

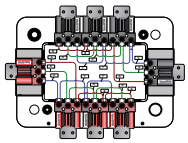

distributor box, IN 2 x 1 x GST18i3, OUT 2 x 3 x GST18i3

Color of coding	Application	Marking of poles	Art.No.
salmon pink, black	mains 250 V	L, N, PE	99.202.0028.0
salmon pink, white	mains 250 V	L, N, PE	99.308.0028.0
white, black	mains 250 V	L, N, PE	99.201.0028.0

U-connector, without fastening option

Color of coding	Application	Marking of poles	Art.No.
□ white	mains 250 V	L, N, PE	92.030.5853.0

GST18I3, DISTRIBUTOR, 3-POLE

TECHNICAL DATA			
Rated voltage:	250 V	Lockable:	self-locking (unlocking by tool)
Rated current:	20 A		
Degree of protection (IP):	IP20	Additional technical data, see facts & data.	

gesis® LINECT

Color of coding	Application	Marking of poles	Art.No.
☐ white	mains 250 V	L, N, PE	92.030.2253.0

gesis® TOP, lamp terminal built-in

Color of coding	Application	Marking of poles	Art.No.
☐ white	mains 250 V	L, N, PE	92.030.2053.0

gesis® TOP, lamp terminal separate

Color of coding	Application	Marking of poles	Art.No.
☐ white	mains 250 V	L, N, PE	92.030.2153.0

TECHNICAL DATA			
Rated voltage:	250 V	Lockable:	No
Rated current:	20 A	Additional technical data, see facts & data.	
Degree of protection (IP):	IP20		

intermediate coupling, not lockable, without fastening option

Color of coding	Application	Marking of poles	Art.No.
■ black	mains 250 V	L, N, PE	92.030.5958.1
☐ white	mains 250 V	L, N, PE	92.030.5958.0

TECHNICAL DATA			
Rated voltage:	250 V	Lockable:	self-locking (unlocking by tool)
Rated current:	20 A		
Degree of protection (IP):	IP20	Additional technical data, see facts & data.	

intermediate coupling, lockable, without fastening option

Color of coding	Application	Marking of poles	Art.No.
■ black	mains 250 V	L, N, PE	99.452.9910.0

Technical changes reserved

GST18I3, CABLE ASSEMBLY, 2-POLE

0.75 mm², 6 A

TECHNICAL DATA

Rated voltage:	250 V	Lockable:	self-locking (unlocking by tool)
Rated current:	6 A		
Degree of protection (IP):	IP20	Preparation of conductor ends:	ultrasonically compressed wire ends

Additional technical data, see facts & data.

connection cable without PE, male - free end

		Length (m)	H05VV-F halogenated Eca Art.No.	H05Z1Z1-F halogen free Eca Art.No.
Cable color:			■ black	■ black
Color of coding:	■ black	0.3	92.220.0304.1	92.220.0364.1
Application:	protection class II	0.5	92.220.0504.1	92.220.0564.1
	250 V	1	92.220.1004.1	92.220.1064.1
Marking of poles:	L, N	2	92.220.2004.1	
Cable color:			□ white	□ white
Color of coding:	□ white	0.3	92.220.0304.2	92.220.0364.2
Application:	protection class II	0.5	92.220.0504.2	92.220.0564.2
	250 V	1	92.220.1004.2	92.220.1064.2
Marking of poles:	L, N			

GST18I3, CABLE ASSEMBLY, 3-POLE

1 mm², 10 A

TECHNICAL DATA

Rated voltage:	250 V	Lockable:	self-locking (unlocking by tool)
Rated current:	10 A		
Degree of protection (IP):	IP20	Preparation of conductor ends:	ultrasonically compressed wire ends

Additional technical data, see facts & data.

connection cable, male - free end

Cable color:
Color of coding: ■ black
Application: mains 250 V
Marking of poles: L, N, PE

Cable color:
Color of coding: □ white
Application: mains 250 V
Marking of poles: L, N, PE

Length (m)	H05VV-F halogenated Eca Art.No.	H05Z1Z1-F halogen free Eca Art.No.
	■ black	■ black
1	92.231.1004.1	92.231.1064.1
2	92.231.2004.1	
3	92.231.3004.1	92.231.3064.1
4	92.231.4004.1	
5	92.231.5004.1	
8	92.231.8004.1	
	□ white	□ white
0.3		92.231.0364.1
1	92.231.1004.2	92.231.1064.2
2	92.231.2004.2	
3	92.231.3004.2	92.231.3064.2

TECHNICAL DATA

Rated voltage:	250 V	Lockable:	self-locking (unlocking by tool)
Rated current:	10 A		
Degree of protection (IP):	IP20		

Additional technical data, see facts & data.

mains connection cable, low-heat device, female - male

Cable color:
Color of coding: □ white
Application: mains 250 V
Marking of poles: L, N, PE

Length (m)	H05VV-F halogenated Art.No.
	□ white
2	99.400.5623.1

Technical changes reserved

GST18I3, CABLE ASSEMBLY, 3-POLE

1.5 mm², 16 A

TECHNICAL DATA

Rated voltage:	250 V	Lockable:	self-locking (unlocking by tool)
Rated current:	16 A		
Degree of protection (IP):	IP20	Additional technical data, see facts & data.	

connecting cable, female - male

			H07RN-F halogenated	H05VV-F halogenated Eca	H05V2V2-F halogenated Eca
		Length (m)	**Art.No.**	**Art.No.**	**Art.No.**
Cable color:			■ black	■ black	■ black
Color of coding:	■ black	1	G3.032.0102.1	92.232.1000.1	92.232.1010.1
Application:	mains 250 V	2	G3.032.0202.1	92.232.2000.1	92.232.2010.1
Marking of poles:	L, N, PE	3	G3.032.0302.1	92.232.3000.1	92.232.3010.1
		4	G3.032.0402.1	92.232.4000.1	92.232.4010.1
		5	G3.032.0502.1	92.232.5000.1	92.232.5010.1
		6	G3.032.0602.1	92.232.6000.1	92.232.6010.1
		7	G3.032.0702.1	92.232.7000.1	92.232.7010.1
		8	G3.032.0802.1	92.232.8000.1	92.232.8010.1
Cable color:			■ black	□ white	□ white
Color of coding:	□ white	1	G3.032.0102.2	92.232.1000.2	92.232.1010.2
Application:	mains 250 V	2	G3.032.0202.2	92.232.2000.2	92.232.2010.2
Marking of poles:	L, N, PE	3	G3.032.0302.2	92.232.3000.2	
		4	G3.032.0402.2	92.232.4000.2	92.232.4010.2
		5	G3.032.0502.2	92.232.5000.2	92.232.5010.2
		6	G3.032.0602.2	92.232.6000.2	92.232.6010.2
		7	G3.032.0702.2	92.232.7000.2	
		8	G3.032.0802.2	92.232.8000.2	92.232.8010.2
Cable color:				■ black	■ black
Color of coding:	■ salmon pink	1		92.232.1000.5	
Application:	mains 250 V	2		92.232.2000.5	
Marking of poles:	L, N, PE	3		92.232.3000.5	
		4		92.232.4000.5	
		5		92.232.5000.5	92.232.5010.5
		6		92.232.6000.5	
		7		92.232.7000.5	
		8		92.232.8000.5	
Cable color:				■ black	
Color of coding:	■ brown	1		92.232.1000.4	
Application:	switch funktion 250 V	2		92.232.2000.4	
		3		92.232.3000.4	
Marking of poles:	1, 2, 3	4		92.232.4000.4	
		5		92.232.5000.4	
		6		92.232.6000.4	
		7		92.232.7000.4	
		8		92.232.8000.4	
Cable color:				■ black	■ black
Color of coding:	■ pebble grey	1		92.232.1000.3	92.232.1010.3
Application:	UPS 250 V	2		92.232.2000.3	
Marking of poles:	L, N, PE	3		92.232.3000.3	
		4		92.232.4000.3	
		5		92.232.5000.3	
		6		92.232.6000.3	
		7		92.232.7000.3	
		8		92.232.8000.3	
Cable color:				■ black	
Color of coding:	■ tomato red	1		92.297.1000.0	
Application:	UPS 250 V	2		92.297.2000.0	
Marking of poles:	L, N, PE	3		92.297.3000.0	
		4		92.297.4000.0	
		5		92.297.5000.0	
		6		92.297.6000.0	
		7		92.297.7000.0	
		8		92.297.8000.0	
Cable color:				■ black	
Color of coding:	■ may green	1		92.297.1000.7	
Application:	customized (with PE)	2		92.297.2000.7	
		3		92.297.3000.7	
Marking of poles:	1, PE, 2/N	4		92.297.4000.7	
		5		92.297.5000.7	
		6		92.297.6000.7	
		7		92.297.7000.7	
		8		92.297.8000.7	

GST18I3, CABLE ASSEMBLY, 3-POLE

1.5 mm², 16 A

TECHNICAL DATA

Rated voltage:	250 V	Lockable:	self-locking (unlocking by tool)
Rated current:	16 A		
Degree of protection (IP):	IP20	Additional technical data, see facts & data.	

connecting cable, female - male

		Length (m)	H05Z1Z1-F halogen free B2ca s1 d1 a1 Art.No.	H05Z1Z1-F halogen free Cca s1 d1 a1 Art.No.	H05Z1Z1-F halogen free Eca Art.No.
Cable color:			■ black	■ black	■ black
Color of coding:	■ black	1	92.232.1070.1	92.232.1050.1	92.232.1060.1
Application:	mains 250 V	2	92.232.2070.1	92.232.2050.1	92.232.2060.1
Marking of poles:	L, N, PE	3	92.232.3070.1	92.232.3050.1	92.232.3060.1
		4	92.232.4070.1	92.232.4050.1	92.232.4060.1
		5	92.232.5070.1	92.232.5050.1	92.232.5060.1
		6	92.232.6070.1	92.232.6050.1	92.232.6060.1
		7	92.232.7070.1	92.232.7050.1	92.232.7060.1
		8	92.232.8070.1	92.232.8050.1	92.232.8060.1
Cable color:			□ white	□ white	□ white
Color of coding:	□ white	1	92.232.1070.2	92.232.1050.2	92.232.1060.2
Application:	mains 250 V	2	92.232.2070.2	92.232.2050.2	92.232.2060.2
Marking of poles:	L, N, PE	3	92.232.3070.2	92.232.3050.2	92.232.3060.2
		4	92.232.4070.2	92.232.4050.2	92.232.4060.2
		5	92.232.5070.2	92.232.5050.2	92.232.5060.2
		6	92.232.6070.2	92.232.6050.2	92.232.6060.2
		7	92.232.7070.2	92.232.7050.2	92.232.7060.2
		8	92.232.8070.2	92.232.8050.2	92.232.8060.2
Cable color:			■ black	■ black	■ black
Color of coding:	■ salmon pink	1	92.232.1070.5	92.232.1050.5	92.232.1060.5
Application:	mains 250 V	2	92.232.2070.5	92.232.2050.5	92.232.2060.5
Marking of poles:	L, N, PE	3	92.232.3070.5	92.232.3050.5	92.232.3060.5
		4	92.232.4070.5	92.232.4050.5	92.232.4060.5
		5	92.232.5070.5	92.232.5050.5	92.232.5060.5
		6	92.232.6070.5	92.232.6050.5	92.232.6060.5
		7	92.232.7070.5	92.232.7050.5	92.232.7060.5
		8	92.232.8070.5	92.232.8050.5	92.232.8060.5
Cable color:			■ black	■ black	■ black
Color of coding:	■ brown	1	92.232.1070.4	92.232.1050.4	92.232.1060.4
Application:	switch funktion 250 V	2	92.232.2070.4	92.232.2050.4	92.232.2060.4
		3	92.232.3070.4	92.232.3050.4	92.232.3060.4
Marking of poles:	1, 2, 3	4	92.232.4070.4	92.232.4050.4	92.232.4060.4
		5	92.232.5070.4	92.232.5050.4	92.232.5060.4
		6	92.232.6070.4	92.232.6050.4	92.232.6060.4
		7	92.232.7070.4	92.232.7050.4	92.232.7060.4
		8	92.232.8070.4	92.232.8050.4	92.232.8060.4
Cable color:			■ black	■ black	■ black
Color of coding:	■ pebble grey	1	92.232.1070.3	92.232.1050.3	92.232.1060.3
Application:	UPS 250 V	2	92.232.2070.3	92.232.2050.3	92.232.2060.3
Marking of poles:	L, N, PE	3	92.232.3070.3	92.232.3050.3	92.232.3060.3
		4	92.232.4070.3	92.232.4050.3	92.232.4060.3
		5	92.232.5070.3	92.232.5050.3	92.232.5060.3
		6	92.232.6070.3	92.232.6050.3	92.232.6060.3
		7	92.232.7070.3	92.232.7050.3	92.232.7060.3
		8	92.232.8070.3	92.232.8050.3	92.232.8060.3
Cable color:			■ black	■ black	■ black
Color of coding:	■ tomato red	1	92.297.1070.0	92.297.1050.0	92.297.1060.0
Application:	UPS 250 V	2	92.297.2070.0	92.297.2050.0	92.297.2060.0
Marking of poles:	L, N, PE	3	92.297.3070.0	92.297.3050.0	92.297.3060.0
		4	92.297.4070.0	92.297.4050.0	92.297.4060.0
		5	92.297.5070.0	92.297.5050.0	92.297.5060.0
		6	92.297.6070.0	92.297.6050.0	92.297.6060.0
		7	92.297.7070.0	92.297.7050.0	92.297.7060.0
		8	92.297.8070.0	92.297.8050.0	92.297.8060.0
Cable color:			■ black	■ black	■ black
Color of coding:	■ may green	1	92.297.1070.7	92.297.1050.7	92.297.1060.7
Application:	customized (with PE)	2	92.297.2070.7	92.297.2050.7	92.297.2060.7
		3	92.297.3070.7	92.297.3050.7	92.297.3060.7
Marking of poles:	1, PE, 2/N	4	92.297.4070.7	92.297.4050.7	92.297.4060.7
		5	92.297.5070.7	92.297.5050.7	92.297.5060.7
		6	92.297.6070.7	92.297.6050.7	92.297.6060.7
		7	92.297.7070.7	92.297.7050.7	92.297.7060.7
		8	92.297.8070.7	92.297.8050.7	92.297.8060.7

Technical changes reserved

GST18I3, CABLE ASSEMBLY, 3-POLE

1.5 mm², 16 A

TECHNICAL DATA

Rated voltage:	250 V	Lockable:	self-locking (unlocking by tool)
Rated current:	16 A		
Degree of protection (IP):	IP20	Preparation of conductor ends:	ultrasonically compressed wire ends

Additional technical data, see facts & data.

connection cable, female - free end

		Length (m)	H07RN-F halogenated Art.No.	H05VV-F halogenated Eca Art.No.	H05V2V2-F halogenated Eca Art.No.
Cable color:			■ black	■ black	■ black
Color of coding:	■ black	1	G3.332.0102.1	92.232.1003.1	92.232.1013.1
Application:	mains 250 V	2	G3.332.0202.1	92.232.2003.1	92.232.2013.1
Marking of poles:	L, N, PE	3	G3.332.0302.1	92.232.3003.1	92.232.3013.1
		4	G3.332.0402.1	92.232.4003.1	92.232.4013.1
		5	G3.332.0502.1	92.232.5003.1	92.232.5013.1
		6	G3.332.0602.1	92.232.6003.1	
		7	G3.332.0702.1	92.232.7003.1	
		8	G3.332.0802.1	92.232.8003.1	92.232.8013.1
Cable color:			■ black	□ white	□ white
Color of coding:	□ white	1	G3.332.0102.2	92.232.1003.2	92.232.1013.2
Application:	mains 250 V	2		92.232.2003.2	92.232.2013.2
Marking of poles:	L, N, PE	3	G3.332.0302.2	92.232.3003.2	
		4	G3.332.0402.2	92.232.4003.2	
		5	G3.332.0502.2	92.232.5003.2	92.232.5013.2
		6	G3.332.0602.2	92.232.6003.2	
		7	G3.332.0702.2	92.232.7003.2	
		8	G3.332.0802.2	92.232.8003.2	
Cable color:				■ black	
Color of coding:	■ salmon pink	1		92.232.1003.5	
Application:	mains 250 V	2		92.232.2003.5	
Marking of poles:	L, N, PE	3		92.232.3003.5	
		4		92.232.4003.5	
		5		92.232.5003.5	
		6		92.232.6003.5	
		7		92.232.7003.5	
		8		92.232.8003.5	
Cable color:				■ black	
Color of coding:	■ brown	1		92.232.1003.4	
Application:	switch funktion 250 V	2		92.232.2003.4	
		3		92.232.3003.4	
Marking of poles:	1, 2, 3	4		92.232.4003.4	
		5		92.232.5003.4	
		6		92.232.6003.4	
		7		92.232.7003.4	
		8		92.232.8003.4	
Cable color:				■ black	
Color of coding:	■ pebble grey	1		92.232.1003.3	
Application:	UPS 250 V	2		92.232.2003.3	
Marking of poles:	L, N, PE	3		92.232.3003.3	
		4		92.232.4003.3	
		5		92.232.5003.3	
		6		92.232.6003.3	
		7		92.232.7003.3	
		8		92.232.8003.3	
Cable color:				■ black	
Color of coding:	■ tomato red	1		92.297.1003.0	
Application:	UPS 250 V	2		92.297.2003.0	
Marking of poles:	L, N, PE	3		92.297.3003.0	
		4		92.297.4003.0	
		5		92.297.5003.0	
		6		92.297.6003.0	
		7		92.297.7003.0	
		8		92.297.8003.0	
Cable color:				■ black	
Color of coding:	■ may green	1		92.297.1003.7	
Application:	customized (with PE)	2		92.297.2003.7	
		3		92.297.3003.7	
Marking of poles:	1, PE, 2/N	4		92.297.4003.7	
		5		92.297.5003.7	
		6		92.297.6003.7	
		7		92.297.7003.7	
		8		92.297.8003.7	

GST18I3, CABLE ASSEMBLY, 3-POLE

1.5 mm², 16 A

TECHNICAL DATA

Rated voltage:	250 V	Lockable:	self-locking (unlocking by tool)
Rated current:	16 A		
Degree of protection (IP):	IP20	Preparation of conductor ends:	ultrasonically compressed wire ends

Additional technical data, see facts & data.

connection cable, female - free end

		Length (m)	H05Z1Z1-F halogen free B2ca s1 d1 a1 Art.No.	H05Z1Z1-F halogen free Cca s1 d1 a1 Art.No.	H05Z1Z1-F halogen free Eca Art.No.
Cable color:			■ black	■ black	■ black
Color of coding:	■ black	1	92.232.1073.1	92.232.1053.1	92.232.1063.1
Application:	mains 250 V	2	92.232.2073.1	92.232.2053.1	92.232.2063.1
Marking of poles:	L, N, PE	3	92.232.3073.1	92.232.3053.1	92.232.3063.1
		4	92.232.4073.1	92.232.4053.1	92.232.4063.1
		5	92.232.5073.1	92.232.5053.1	92.232.5063.1
		6	92.232.6073.1	92.232.6053.1	92.232.6063.1
		7	92.232.7073.1	92.232.7053.1	92.232.7063.1
		8	92.232.8073.1	92.232.8053.1	92.232.8063.1
Cable color:			□ white	□ white	□ white
Color of coding:	□ white	1	92.232.1073.2	92.232.1053.2	92.232.1063.2
Application:	mains 250 V	2	92.232.2073.2	92.232.2053.2	92.232.2063.2
Marking of poles:	L, N, PE	3	92.232.3073.2	92.232.3053.2	92.232.3063.2
		4	92.232.4073.2	92.232.4053.2	92.232.4063.2
		5	92.232.5073.2	92.232.5053.2	92.232.5063.2
		6	92.232.6073.2	92.232.6053.2	92.232.6063.2
		7	92.232.7073.2	92.232.7053.2	92.232.7063.2
		8	92.232.8073.2	92.232.8053.2	92.232.8063.2
Cable color:			■ black	■ black	■ black
Color of coding:	salmon pink	1	92.232.1073.5	92.232.1053.5	92.232.1063.5
Application:	mains 250 V	2	92.232.2073.5	92.232.2053.5	92.232.2063.5
Marking of poles:	L, N, PE	3	92.232.3073.5	92.232.3053.5	92.232.3063.5
		4	92.232.4073.5	92.232.4053.5	92.232.4063.5
		5	92.232.5073.5	92.232.5053.5	92.232.5063.5
		6	92.232.6073.5	92.232.6053.5	92.232.6063.5
		7	92.232.7073.5	92.232.7053.5	92.232.7063.5
		8	92.232.8073.5	92.232.8053.5	92.232.8063.5
Cable color:			■ black	■ black	■ black
Color of coding:	■ brown	1	92.232.1073.4	92.232.1053.4	92.232.1063.4
Application:	switch funktion 250 V	2	92.232.2073.4	92.232.2053.4	92.232.2063.4
		3	92.232.3073.4	92.232.3053.4	92.232.3063.4
Marking of poles:	1, 2, 3	4	92.232.4073.4	92.232.4053.4	92.232.4063.4
		5	92.232.5073.4	92.232.5053.4	92.232.5063.4
		6	92.232.6073.4	92.232.6053.4	92.232.6063.4
		7	92.232.7073.4	92.232.7053.4	92.232.7063.4
		8	92.232.8073.4	92.232.8053.4	92.232.8063.4
Cable color:			■ black	■ black	■ black
Color of coding:	pebble grey	1	92.232.1073.3	92.232.1053.3	92.232.1063.3
Application:	UPS 250 V	2	92.232.2073.3	92.232.2053.3	92.232.2063.3
Marking of poles:	L, N, PE	3	92.232.3073.3	92.232.3053.3	92.232.3063.3
		4	92.232.4073.3	92.232.4053.3	92.232.4063.3
		5	92.232.5073.3	92.232.5053.3	92.232.5063.3
		6	92.232.6073.3	92.232.6053.3	92.232.6063.3
		7	92.232.7073.3	92.232.7053.3	92.232.7063.3
		8	92.232.8073.3	92.232.8053.3	92.232.8063.3
Cable color:			■ black	■ black	■ black
Color of coding:	tomato red	1	92.297.1073.0	92.297.1053.0	92.297.1063.0
Application:	UPS 250 V	2	92.297.2073.0	92.297.2053.0	92.297.2063.0
Marking of poles:	L, N, PE	3	92.297.3073.0	92.297.3053.0	92.297.3063.0
		4	92.297.4073.0	92.297.4053.0	92.297.4063.0
		5	92.297.5073.0	92.297.5053.0	92.297.5063.0
		6	92.297.6073.0	92.297.6053.0	92.297.6063.0
		7	92.297.7073.0	92.297.7053.0	92.297.7063.0
		8	92.297.8073.0	92.297.8053.0	92.297.8063.0
Cable color:			■ black	■ black	■ black
Color of coding:	may green	1	92.297.1073.7	92.297.1053.7	92.297.1063.7
Application:	customized (with PE)	2	92.297.2073.7	92.297.2053.7	92.297.2063.7
		3	92.297.3073.7	92.297.3053.7	92.297.3063.7
Marking of poles:	1, PE, 2/N	4	92.297.4073.7	92.297.4053.7	92.297.4063.7
		5	92.297.5073.7	92.297.5053.7	92.297.5063.7
		6	92.297.6073.7	92.297.6053.7	92.297.6063.7
		7	92.297.7073.7	92.297.7053.7	92.297.7063.7
		8	92.297.8073.7	92.297.8053.7	92.297.8063.7

Technical changes reserved

GST18I3, CABLE ASSEMBLY, 3-POLE

1.5 mm², 16 A

TECHNICAL DATA

Rated voltage:	250 V	Lockable:	self-locking (unlocking by tool)
Rated current:	16 A		
Degree of protection (IP):	IP20	Preparation of conductor ends:	ultrasonically compressed wire ends

Additional technical data, see facts & data.

connection cable, male - free end

		Length (m)	H07RN-F halogenated Art.No.	H05VV-F halogenated Eca Art.No.	H05V2V2-F halogenated Eca Art.No.
Cable color:			■ black	■ black	■ black
Color of coding:	■ black	1	G3.432.0102.1	92.232.1004.1	92.232.1014.1
Application:	mains 250 V	2	G3.432.0202.1	92.232.2004.1	92.232.2014.1
Marking of poles:	L, N, PE	3	G3.432.0302.1	92.232.3004.1	92.232.3014.1
		4	G3.432.0402.1	92.232.4004.1	92.232.4014.1
		5	G3.432.0502.1	92.232.5004.1	92.232.5014.1
		6	G3.432.0602.1	92.232.6004.1	92.232.6014.1
		7		92.232.7004.1	
		8	G3.432.0802.1	92.232.8004.1	92.232.8014.1
Cable color:			■ black	□ white	□ white
Color of coding:	□ white	1	G3.432.0102.2	92.232.1004.2	92.232.1014.2
Application:	mains 250 V	2		92.232.2004.2	92.232.2014.2
Marking of poles:	L, N, PE	3	G3.432.0302.2	92.232.3004.2	
		4		92.232.4004.2	92.232.4014.2
		5		92.232.5004.2	
		6		92.232.6004.2	
		7		92.232.7004.2	
		8		92.232.8004.2	
Cable color:				■ black	
Color of coding:	■ salmon pink	1		92.232.1004.5	
Application:	mains 250 V	2		92.232.2004.5	
Marking of poles:	L, N, PE	3		92.232.3004.5	
		4		92.232.4004.5	
		5		92.232.5004.5	
		6		92.232.6004.5	
		7		92.232.7004.5	
		8		92.232.8004.5	
Cable color:				■ black	
Color of coding:	■ brown	1		92.232.1004.4	
Application:	switch funktion 250 V	2		92.232.2004.4	
		3		92.232.3004.4	
Marking of poles:	1, 2, 3	4		92.232.4004.4	
		5		92.232.5004.4	
		6		92.232.6004.4	
		7		92.232.7004.4	
		8		92.232.8004.4	
Cable color:				■ black	
Color of coding:	■ pebble grey	1		92.232.1004.3	
Application:	UPS 250 V	2		92.232.2004.3	
Marking of poles:	L, N, PE	3		92.232.3004.3	
		4		92.232.4004.3	
		5		92.232.5004.3	
		6		92.232.6004.3	
		7		92.232.7004.3	
		8		92.232.8004.3	
Cable color:				■ black	
Color of coding:	■ tomato red	1		92.297.1004.0	
Application:	UPS 250 V	2		92.297.2004.0	
Marking of poles:	L, N, PE	3		92.297.3004.0	
		4		92.297.4004.0	
		5		92.297.5004.0	
		6		92.297.6004.0	
		7		92.297.7004.0	
		8		92.297.8004.0	
Cable color:				■ black	
Color of coding:	■ may green	1		92.297.1004.7	
Application:	customized (with PE)	2		92.297.2004.7	
		3		92.297.3004.7	
Marking of poles:	1, PE, 2/N	4		92.297.4004.7	
		5		92.297.5004.7	
		6		92.297.6004.7	
		7		92.297.7004.7	
		8		92.297.8004.7	

GST18I3, CABLE ASSEMBLY, 3-POLE

1.5 mm², 16 A

TECHNICAL DATA

Rated voltage:	250 V	Lockable:	self-locking (unlocking by tool)
Rated current:	16 A		
Degree of protection (IP):	IP20	Preparation of conductor ends:	ultrasonically compressed wire ends

Additional technical data, see facts & data.

connection cable, male - free end

		Length (m)	H05Z1Z1-F halogen free B2ca s1 d1 a1 Art.No.	H05Z1Z1-F halogen free Cca s1 d1 a1 Art.No.	H05Z1Z1-F halogen free Eca Art.No.
Cable color:			■ black	■ black	■ black
Color of coding:	■ black	1	92.232.1074.1	92.232.1054.1	92.232.1064.1
Application:	mains 250 V	2	92.232.2074.1	92.232.2054.1	92.232.2064.1
Marking of poles:	L, N, PE	3	92.232.3074.1	92.232.3054.1	92.232.3064.1
		4	92.232.4074.1	92.232.4054.1	92.232.4064.1
		5	92.232.5074.1	92.232.5054.1	92.232.5064.1
		6	92.232.6074.1	92.232.6054.1	92.232.6064.1
		7	92.232.7074.1	92.232.7054.1	92.232.7064.1
		8	92.232.8074.1	92.232.8054.1	92.232.8064.1
Cable color:			□ white	□ white	□ white
Color of coding:	□ white	1	92.232.1074.2	92.232.1054.2	92.232.1064.2
Application:	mains 250 V	2	92.232.2074.2	92.232.2054.2	92.232.2064.2
Marking of poles:	L, N, PE	3	92.232.3074.2	92.232.3054.2	92.232.3064.2
		4	92.232.4074.2	92.232.4054.2	92.232.4064.2
		5	92.232.5074.2	92.232.5054.2	92.232.5064.2
		6	92.232.6074.2	92.232.6054.2	92.232.6064.2
		7	92.232.7074.2	92.232.7054.2	92.232.7064.2
		8	92.232.8074.2	92.232.8054.2	92.232.8064.2
Cable color:			■ black	■ black	■ black
Color of coding:	salmon pink	1	92.232.1074.5	92.232.1054.5	92.232.1064.5
Application:	mains 250 V	2	92.232.2074.5	92.232.2054.5	92.232.2064.5
Marking of poles:	L, N, PE	3	92.232.3074.5	92.232.3054.5	92.232.3064.5
		4	92.232.4074.5	92.232.4054.5	92.232.4064.5
		5	92.232.5074.5	92.232.5054.5	92.232.5064.5
		6	92.232.6074.5	92.232.6054.5	92.232.6064.5
		7	92.232.7074.5	92.232.7054.5	92.232.7064.5
		8	92.232.8074.5	92.232.8054.5	92.232.8064.5
Cable color:			■ black	■ black	■ black
Color of coding:	brown	1	92.232.1074.4	92.232.1054.4	92.232.1064.4
Application:	switch funktion 250 V	2	92.232.2074.4	92.232.2054.4	92.232.2064.4
		3	92.232.3074.4	92.232.3054.4	92.232.3064.4
Marking of poles:	1, 2, 3	4	92.232.4074.4	92.232.4054.4	92.232.4064.4
		5	92.232.5074.4	92.232.5054.4	92.232.5064.4
		6	92.232.6074.4	92.232.6054.4	92.232.6064.4
		7	92.232.7074.4	92.232.7054.4	92.232.7064.4
		8	92.232.8074.4	92.232.8054.4	92.232.8064.4
Cable color:			■ black	■ black	■ black
Color of coding:	pebble grey	1	92.232.1074.3	92.232.1054.3	92.232.1064.3
Application:	UPS 250 V	2	92.232.2074.3	92.232.2054.3	92.232.2064.3
Marking of poles:	L, N, PE	3	92.232.3074.3	92.232.3054.3	92.232.3064.3
		4	92.232.4074.3	92.232.4054.3	92.232.4064.3
		5	92.232.5074.3	92.232.5054.3	92.232.5064.3
		6	92.232.6074.3	92.232.6054.3	92.232.6064.3
		7	92.232.7074.3	92.232.7054.3	92.232.7064.3
		8	92.232.8074.3	92.232.8054.3	92.232.8064.3
Cable color:			■ black	■ black	■ black
Color of coding:	tomato red	1	92.297.1074.0	92.297.1054.0	92.297.1064.0
Application:	UPS 250 V	2	92.297.2074.0	92.297.2054.0	92.297.2064.0
Marking of poles:	L, N, PE	3	92.297.3074.0	92.297.3054.0	92.297.3064.0
		4	92.297.4074.0	92.297.4054.0	92.297.4064.0
		5	92.297.5074.0	92.297.5054.0	92.297.5064.0
		6	92.297.6074.0	92.297.6054.0	92.297.6064.0
		7	92.297.7074.0	92.297.7054.0	92.297.7064.0
		8	92.297.8074.0	92.297.8054.0	92.297.8064.0
Cable color:			■ black	■ black	■ black
Color of coding:	may green	1	92.297.1074.7	92.297.1054.7	92.297.1064.7
Application:	customized (with PE)	2	92.297.2074.7	92.297.2054.7	92.297.2064.7
		3	92.297.3074.7	92.297.3054.7	92.297.3064.7
Marking of poles:	1, PE, 2/N	4	92.297.4074.7	92.297.4054.7	92.297.4064.7
		5	92.297.5074.7	92.297.5054.7	92.297.5064.7
		6	92.297.6074.7	92.297.6054.7	92.297.6064.7
		7	92.297.7074.7	92.297.7054.7	92.297.7064.7
		8	92.297.8074.7	92.297.8054.7	92.297.8064.7

Technical changes reserved

GST18I3, CABLE ASSEMBLY, 3-POLE

1.5 mm², 16 A

TECHNICAL DATA

Rated voltage:	250 V	Lockable:	self-locking (unlocking by tool)
Rated current:	16 A		
Degree of protection (IP):	IP20	Additional technical data, see facts & data.	

mains connection cable, female - male CEE 7/4

		Length (m)	H05VV-F halogenated Art.No.	H05V2V2-F halogenated Art.No.
Cable color:			■ black	■ black
Color of coding:	■ black	1	92.232.1007.1	
Application:	mains 250 V	2	92.232.2007.1	92.232.2017.1
Marking of poles:	L, N, PE	3	92.232.3007.1	92.232.3017.1
		4	92.232.4007.1	92.232.4017.1
		5	92.232.5007.1	92.232.5017.1
		6	92.232.6007.1	
		7	92.232.7007.1	
		8	92.232.8007.1	
Cable color:			□ white	
Color of coding:	□ white	1	92.232.1007.2	
Application:	mains 250 V	2	92.232.2007.2	
Marking of poles:	L, N, PE	3	92.232.3007.2	
		4	92.232.4007.2	
		5	92.232.5007.2	
		6	92.232.6007.2	
		7	92.232.7007.2	
		8	92.232.8007.2	
Cable color:			■ black	
Color of coding:	■ salmon pink	2	92.232.2007.5	
Application:	mains 250 V	3	92.232.3007.5	
Marking of poles:	L, N, PE			

1.5 mm², 13 A

TECHNICAL DATA

Rated voltage:	250 V	Lockable:	self-locking (unlocking by tool)
Rated current:	13 A		
Degree of protection (IP):	IP20	Additional technical data, see facts & data.	

mains connection cable, female - mains plug UK

		Length (m)	H05VV-F halogenated Art.No.
Cable color:			■ black
Color of coding:	■ black	1	99.455.9910.0
Application:	mains 250 V		
Marking of poles:	L, N, PE		

GST18I3, CABLE ASSEMBLY, 3-POLE

2.5 mm², 20 A

TECHNICAL DATA

Rated voltage:	250 V	Lockable:	self-locking (unlocking by tool)
Rated current:	20 A		
Degree of protection (IP):	IP20	Additional technical data, see facts & data.	

connecting cable, female - male

			H07RN-F halogenated	H05VV-F halogenated Eca	H05V2V2-F halogenated Eca
		Length (m)	**Art.No.**	**Art.No.**	**Art.No.**
Cable color:			■ black	■ black	■ black
Color of coding:	■ black	1	G3.032.0103.1	92.238.1000.1	92.238.1010.1
Application:	mains 250 V	2	G3.032.0203.1	92.238.2000.1	92.238.2010.1
Marking of poles:	L, N, PE	3	G3.032.0303.1	92.238.3000.1	92.238.3010.1
		4	G3.032.0403.1	92.238.4000.1	92.238.4010.1
		5	G3.032.0503.1	92.238.5000.1	92.238.5010.1
		6	G3.032.0603.1	92.238.6000.1	92.238.6010.1
		7	G3.032.0703.1	92.238.7000.1	92.238.7010.1
		8	G3.032.0803.1	92.238.8000.1	92.238.8010.1
Cable color:			■ black	□ white	□ white
Color of coding:	□ white	1	G3.032.0103.2	92.238.1000.2	
Application:	mains 250 V	2	G3.032.0203.2	92.238.2000.2	92.238.2010.2
Marking of poles:	L, N, PE	3	G3.032.0303.2	92.238.3000.2	92.238.3010.2
		4	G3.032.0403.2	92.238.4000.2	
		5	G3.032.0503.2	92.238.5000.2	92.238.5010.2
		6	G3.032.0603.2	92.238.6000.2	92.238.6010.2
		7	G3.032.0703.2	92.238.7000.2	
		8	G3.032.0803.2	92.238.8000.2	92.238.8010.2
Cable color:				■ black	■ black
Color of coding:	salmon pink	1		92.238.1000.5	92.238.1010.5
Application:	mains 250 V	2		92.238.2000.5	92.238.2010.5
Marking of poles:	L, N, PE	3		92.238.3000.5	
		4		92.238.4000.5	
		5		92.238.5000.5	
		6		92.238.6000.5	
		7		92.238.7000.5	
		8		92.238.8000.5	
Cable color:				■ black	
Color of coding:	■ brown	1		92.238.1000.4	
Application:	switch funktion 250 V	2		92.238.2000.4	
		3		92.238.3000.4	
Marking of poles:	1, 2, 3	4		92.238.4000.4	
		5		92.238.5000.4	
		6		92.238.6000.4	
		7		92.238.7000.4	
		8		92.238.8000.4	
Cable color:				■ black	
Color of coding:	pebble grey	1		92.238.1000.3	
Application:	UPS 250 V	2		92.238.2000.3	
Marking of poles:	L, N, PE	3		92.238.3000.3	
		4		92.238.4000.3	
		5		92.238.5000.3	
		6		92.238.6000.3	
		7		92.238.7000.3	
		8		92.238.8000.3	
Cable color:					
Color of coding:	tomato red	4			
Application:	UPS 250 V	6			
Marking of poles:	L, N, PE	8			
Cable color:					
Color of coding:	may green	1			
Application:	customized (with PE)	2			
		3			
Marking of poles:	1, PE, 2/N	4			
		5			
		6			
		7			
		8			

Technical changes reserved

GST18I3, CABLE ASSEMBLY, 3-POLE

2.5 mm², 20 A

TECHNICAL DATA

Rated voltage:	250 V	Lockable:	self-locking (unlocking by tool)
Rated current:	20 A		
Degree of protection (IP):	IP20	Additional technical data, see facts & data.	

connecting cable, female - male

		Length (m)	H05Z1Z1-F halogen free B2ca s1 d1 a1 Art.No.	H05Z1Z1-F halogen free Cca s1 d1 a1 Art.No.	H05Z1Z1-F halogen free Eca Art.No.
Cable color:			■ black	■ black	■ black
Color of coding:	■ black	1	92.238.1070.1	92.238.1050.1	92.238.1060.1
Application:	mains 250 V	2	92.238.2070.1	92.238.2050.1	92.238.2060.1
Marking of poles:	L, N, PE	3	92.238.3070.1	92.238.3050.1	92.238.3060.1
		4	92.238.4070.1	92.238.4050.1	92.238.4060.1
		5	92.238.5070.1	92.238.5050.1	92.238.5060.1
		6	92.238.6070.1	92.238.6050.1	92.238.6060.1
		7	92.238.7070.1	92.238.7050.1	92.238.7060.1
		8	92.238.8070.1	92.238.8050.1	92.238.8060.1
Cable color:			□ white	□ white	□ white
Color of coding:	□ white	1	92.238.1070.2	92.238.1050.2	92.238.1060.2
Application:	mains 250 V	2	92.238.2070.2	92.238.2050.2	92.238.2060.2
Marking of poles:	L, N, PE	3	92.238.3070.2	92.238.3050.2	92.238.3060.2
		4	92.238.4070.2	92.238.4050.2	92.238.4060.2
		5	92.238.5070.2	92.238.5050.2	92.238.5060.2
		6	92.238.6070.2	92.238.6050.2	92.238.6060.2
		7	92.238.7070.2	92.238.7050.2	92.238.7060.2
		8	92.238.8070.2	92.238.8050.2	92.238.8060.2
Cable color:			■ black	■ black	■ black
Color of coding:	■ salmon pink	1	92.238.1070.5	92.238.1050.5	92.238.1060.5
Application:	mains 250 V	2	92.238.2070.5	92.238.2050.5	92.238.2060.5
Marking of poles:	L, N, PE	3	92.238.3070.5	92.238.3050.5	92.238.3060.5
		4	92.238.4070.5	92.238.4050.5	92.238.4060.5
		5	92.238.5070.5	92.238.5050.5	92.238.5060.5
		6	92.238.6070.5	92.238.6050.5	92.238.6060.5
		7	92.238.7070.5	92.238.7050.5	92.238.7060.5
		8	92.238.8070.5	92.238.8050.5	92.238.8060.5
Cable color:			■ black	■ black	■ black
Color of coding:	■ brown	1	92.238.1070.4	92.238.1050.4	92.238.1060.4
Application:	switch funktion 250 V	2	92.238.2070.4	92.238.2050.4	92.238.2060.4
		3	92.238.3070.4	92.238.3050.4	92.238.3060.4
Marking of poles:	1, 2, 3	4	92.238.4070.4	92.238.4050.4	92.238.4060.4
		5	92.238.5070.4	92.238.5050.4	92.238.5060.4
		6	92.238.6070.4	92.238.6050.4	92.238.6060.4
		7	92.238.7070.4	92.238.7050.4	92.238.7060.4
		8	92.238.8070.4	92.238.8050.4	92.238.8060.4
Cable color:			■ black	■ black	■ black
Color of coding:	■ pebble grey	1	92.238.1070.3	92.238.1050.3	92.238.1060.3
Application:	UPS 250 V	2	92.238.2070.3	92.238.2050.3	92.238.2060.3
Marking of poles:	L, N, PE	3	92.238.3070.3	92.238.3050.3	92.238.3060.3
		4	92.238.4070.3	92.238.4050.3	92.238.4060.3
		5	92.238.5070.3	92.238.5050.3	92.238.5060.3
		6	92.238.6070.3	92.238.6050.3	92.238.6060.3
		7	92.238.7070.3	92.238.7050.3	92.238.7060.3
		8	92.238.8070.3	92.238.8050.3	92.238.8060.3
Cable color:			■ black	■ black	■ black
Color of coding:	■ tomato red	4	92.298.4070.0	92.298.4050.0	92.298.4060.0
Application:	UPS 250 V	6	92.298.6070.0	92.298.6050.0	
Marking of poles:	L, N, PE	8	92.298.8070.0	92.298.8050.0	
Cable color:			■ black	■ black	■ black
Color of coding:	■ may green	1	92.298.1070.7	92.298.1050.7	92.298.1060.7
Application:	customized (with PE)	2	92.298.2070.7	92.298.2050.7	92.298.2060.7
		3	92.298.3070.7	92.298.3050.7	92.298.3060.7
Marking of poles:	1, PE, 2/N	4	92.298.4070.7	92.298.4050.7	92.298.4060.7
		5	92.298.5070.7	92.298.5050.7	92.298.5060.7
		6	92.298.6070.7	92.298.6050.7	92.298.6060.7
		7	92.298.7070.7	92.298.7050.7	92.298.7060.7
		8	92.298.8070.7	92.298.8050.7	92.298.8060.7

GST18I3, CABLE ASSEMBLY, 3-POLE

2.5 mm², 20 A

TECHNICAL DATA

Rated voltage:	250 V	Lockable:	self-locking (unlocking by tool)
Rated current:	20 A		
Degree of protection (IP):	IP20	Preparation of conductor ends:	ultrasonically compressed wire ends

Additional technical data, see facts & data.

connection cable, female - free end

		Length (m)	H07RN-F halogenated Art.No.	H05VV-F halogenated Eca Art.No.	H05V2V2-F halogenated Eca Art.No.
Cable color:			■ black	■ black	■ black
Color of coding:	■ black	1	G3.332.0103.1	92.238.1003.1	92.238.1013.1
Application:	mains 250 V	2	G3.332.0203.1	92.238.2003.1	92.238.2013.1
Marking of poles:	L, N, PE	3	G3.332.0303.1	92.238.3003.1	92.238.3013.1
		4	G3.332.0403.1	92.238.4003.1	92.238.4013.1
		5	G3.332.0503.1	92.238.5003.1	92.238.5013.1
		6		92.238.6003.1	92.238.6013.1
		7	G3.332.0703.1	92.238.7003.1	92.238.7013.1
		8	G3.332.0803.1	92.238.8003.1	92.238.8013.1
Cable color:			■ black	□ white	□ white
Color of coding:	□ white	1	G3.332.0103.2	92.238.1003.2	
Application:	mains 250 V	2	G3.332.0203.2	92.238.2003.2	
Marking of poles:	L, N, PE	3	G3.332.0303.2	92.238.3003.2	
		4		92.238.4003.2	
		5	G3.332.0503.2	92.238.5003.2	
		6		92.238.6003.2	
		7	G3.332.0703.2	92.238.7003.2	
		8		92.238.8003.2	92.238.8013.2
Cable color:				■ black	■ black
Color of coding:	■ salmon pink	1		92.238.1003.5	92.238.1013.5
Application:	mains 250 V	2		92.238.2003.5	
Marking of poles:	L, N, PE	3		92.238.3003.5	
		4		92.238.4003.5	
		5		92.238.5003.5	
		6		92.238.6003.5	
		7		92.238.7003.5	
		8		92.238.8003.5	
Cable color:				■ black	
Color of coding:	■ brown	1		92.238.1003.4	
Application:	switch funktion 250 V	2		92.238.2003.4	
		3		92.238.3003.4	
Marking of poles:	1, 2, 3	4		92.238.4003.4	
		5		92.238.5003.4	
		6		92.238.6003.4	
		7		92.238.7003.4	
		8		92.238.8003.4	
Cable color:				■ black	■ black
Color of coding:	■ pebble grey	1		92.238.1003.3	
Application:	UPS 250 V	2		92.238.2003.3	
Marking of poles:	L, N, PE	3		92.238.3003.3	92.238.3013.3
		4		92.238.4003.3	
		5		92.238.5003.3	
		6		92.238.6003.3	
		7		92.238.7003.3	
		8		92.238.8003.3	
Cable color:					
Color of coding:	■ may green	1			
Application:	customized (with PE)	2			
		3			
Marking of poles:	1, PE, 2/N	4			
		5			
		6			
		7			
		8			

Technical changes reserved

GST18I3, CABLE ASSEMBLY, 3-POLE

2.5 mm², 20 A

TECHNICAL DATA

Rated voltage:	250 V	Lockable:	self-locking (unlocking by tool)
Rated current:	20 A		
Degree of protection (IP):	IP20	Preparation of conductor ends:	ultrasonically compressed wire ends

Additional technical data, see facts & data.

connection cable, female - free end

		Length (m)	H05Z1Z1-F halogen free B2ca s1 d1 a1 Art.No.	H05Z1Z1-F halogen free Cca s1 d1 a1 Art.No.	H05Z1Z1-F halogen free Eca Art.No.
Cable color:			■ black	■ black	■ black
Color of coding:	■ black	1	92.238.1073.1	92.238.1053.1	92.238.1063.1
Application:	mains 250 V	2	92.238.2073.1	92.238.2053.1	92.238.2063.1
Marking of poles:	L, N, PE	3	92.238.3073.1	92.238.3053.1	92.238.3063.1
		4	92.238.4073.1	92.238.4053.1	92.238.4063.1
		5	92.238.5073.1	92.238.5053.1	92.238.5063.1
		6	92.238.6073.1	92.238.6053.1	92.238.6063.1
		7	92.238.7073.1	92.238.7053.1	92.238.7063.1
		8	92.238.8073.1	92.238.8053.1	92.238.8063.1
Cable color:			□ white	□ white	□ white
Color of coding:	□ white	1	92.238.1073.2	92.238.1053.2	92.238.1063.2
Application:	mains 250 V	2	92.238.2073.2	92.238.2053.2	92.238.2063.2
Marking of poles:	L, N, PE	3	92.238.3073.2	92.238.3053.2	92.238.3063.2
		4	92.238.4073.2	92.238.4053.2	92.238.4063.2
		5	92.238.5073.2	92.238.5053.2	92.238.5063.2
		6	92.238.6073.2	92.238.6053.2	92.238.6063.2
		7	92.238.7073.2	92.238.7053.2	92.238.7063.2
		8	92.238.8073.2	92.238.8053.2	92.238.8063.2
Cable color:			■ black	■ black	■ black
Color of coding:	salmon pink	1	92.238.1073.5	92.238.1053.5	92.238.1063.5
Application:	mains 250 V	2	92.238.2073.5	92.238.2053.5	92.238.2063.5
Marking of poles:	L, N, PE	3	92.238.3073.5	92.238.3053.5	92.238.3063.5
		4	92.238.4073.5	92.238.4053.5	92.238.4063.5
		5	92.238.5073.5	92.238.5053.5	92.238.5063.5
		6	92.238.6073.5	92.238.6053.5	92.238.6063.5
		7	92.238.7073.5	92.238.7053.5	92.238.7063.5
		8	92.238.8073.5	92.238.8053.5	92.238.8063.5
Cable color:			■ black	■ black	■ black
Color of coding:	■ brown	1	92.238.1073.4	92.238.1053.4	92.238.1063.4
Application:	switch funktion 250 V	2	92.238.2073.4	92.238.2053.4	92.238.2063.4
		3	92.238.3073.4	92.238.3053.4	92.238.3063.4
Marking of poles:	1, 2, 3	4	92.238.4073.4	92.238.4053.4	92.238.4063.4
		5	92.238.5073.4	92.238.5053.4	92.238.5063.4
		6	92.238.6073.4	92.238.6053.4	92.238.6063.4
		7	92.238.7073.4	92.238.7053.4	92.238.7063.4
		8	92.238.8073.4	92.238.8053.4	92.238.8063.4
Cable color:			■ black	■ black	■ black
Color of coding:	pebble grey	1	92.238.1073.3	92.238.1053.3	92.238.1063.3
Application:	UPS 250 V	2	92.238.2073.3	92.238.2053.3	92.238.2063.3
Marking of poles:	L, N, PE	3	92.238.3073.3	92.238.3053.3	92.238.3063.3
		4	92.238.4073.3	92.238.4053.3	92.238.4063.3
		5	92.238.5073.3	92.238.5053.3	92.238.5063.3
		6	92.238.6073.3	92.238.6053.3	92.238.6063.3
		7	92.238.7073.3	92.238.7053.3	92.238.7063.3
		8	92.238.8073.3	92.238.8053.3	92.238.8063.3
Cable color:			■ black	■ black	■ black
Color of coding:	may green	1	92.298.1073.7	92.298.1053.7	92.298.1063.7
Application:	customized (with PE)	2	92.298.2073.7	92.298.2053.7	92.298.2063.7
		3	92.298.3073.7	92.298.3053.7	92.298.3063.7
Marking of poles:	1, PE, 2/N	4	92.298.4073.7	92.298.4053.7	92.298.4063.7
		5	92.298.5073.7	92.298.5053.7	92.298.5063.7
		6	92.298.6073.7	92.298.6053.7	92.298.6063.7
		7	92.298.7073.7	92.298.7053.7	92.298.7063.7
		8	92.298.8073.7	92.298.8053.7	92.298.8063.7

GST18I3, CABLE ASSEMBLY, 3-POLE

2.5 mm², 20 A

TECHNICAL DATA

Rated voltage:	250 V	Lockable:	self-locking (unlocking by tool)
Rated current:	20 A		
Degree of protection (IP):	IP20	Preparation of conductor ends:	ultrasonically compressed wire ends

Additional technical data, see facts & data.

connection cable, male - free end

			H07RN-F halogenated	H05VV-F halogenated Eca	H05V2V2-F halogenated Eca
		Length (m)	**Art.No.**	**Art.No.**	**Art.No.**
Cable color:			■ black	■ black	■ black
Color of coding:	■ black	1	G3.432.0103.1	92.238.1004.1	92.238.1014.1
Application:	mains 250 V	2	G3.432.0203.1	92.238.2004.1	92.238.2014.1
Marking of poles:	L, N, PE	3	G3.432.0303.1	92.238.3004.1	
		4	G3.432.0403.1	92.238.4004.1	
		5	G3.432.0503.1	92.238.5004.1	
		6	G3.432.0603.1	92.238.6004.1	
		7	G3.432.0703.1	92.238.7004.1	
		8	G3.432.0803.1	92.238.8004.1	92.238.8014.1
Cable color:			■ black	□ white	□ white
Color of coding:	□ white	1	G3.432.0103.2	92.238.1004.2	92.238.1014.2
Application:	mains 250 V	2		92.238.2004.2	
Marking of poles:	L, N, PE	3	G3.432.0303.2	92.238.3004.2	
		4	G3.432.0403.2	92.238.4004.2	
		5	G3.432.0503.2	92.238.5004.2	
		6	G3.432.0603.2	92.238.6004.2	
		7	G3.432.0703.2	92.238.7004.2	
		8		92.238.8004.2	92.238.8014.2
Cable color:				■ black	
Color of coding:	■ salmon pink	1		92.238.1004.5	
Application:	mains 250 V	2		92.238.2004.5	
Marking of poles:	L, N, PE	3		92.238.3004.5	
		4		92.238.4004.5	
		5		92.238.5004.5	
		6		92.238.6004.5	
		7		92.238.7004.5	
		8		92.238.8004.5	
Cable color:				■ black	
Color of coding:	■ brown	1		92.238.1004.4	
Application:	switch funktion 250 V	2		92.238.2004.4	
		3		92.238.3004.4	
Marking of poles:	1, 2, 3	4		92.238.4004.4	
		5		92.238.5004.4	
		6		92.238.6004.4	
		7		92.238.7004.4	
		8		92.238.8004.4	
Cable color:				■ black	
Color of coding:	■ pebble grey	1		92.238.1004.3	
Application:	UPS 250 V	2		92.238.2004.3	
Marking of poles:	L, N, PE	3		92.238.3004.3	
		4		92.238.4004.3	
		5		92.238.5004.3	
		6		92.238.6004.3	
		7		92.238.7004.3	
		8		92.238.8004.3	
Cable color:					
Color of coding:	■ may green	1			
Application:	customized (with PE)	2			
		3			
Marking of poles:	1, PE, 2/N	4			
		5			
		6			
		7			
		8			

Technical changes reserved

GST18I3, CABLE ASSEMBLY, 3-POLE

2.5 mm², 20 A

TECHNICAL DATA

Rated voltage:	250 V	Lockable:	self-locking (unlocking by tool)
Rated current:	20 A		
Degree of protection (IP):	IP20	Preparation of conductor ends:	ultrasonically compressed wire ends

Additional technical data, see facts & data.

connection cable, male - free end

		Length (m)	H05Z1Z1-F halogen free B2ca s1 d1 a1 Art.No.	H05Z1Z1-F halogen free Cca s1 d1 a1 Art.No.	H05Z1Z1-F halogen free Eca Art.No.
Cable color:			■ black	■ black	■ black
Color of coding:	■ black	1	92.238.1074.1	92.238.1054.1	92.238.1064.1
Application:	mains 250 V	2	92.238.2074.1	92.238.2054.1	92.238.2064.1
Marking of poles:	L, N, PE	3	92.238.3074.1	92.238.3054.1	92.238.3064.1
		4	92.238.4074.1	92.238.4054.1	92.238.4064.1
		5	92.238.5074.1	92.238.5054.1	92.238.5064.1
		6	92.238.6074.1	92.238.6054.1	92.238.6064.1
		7	92.238.7074.1	92.238.7054.1	92.238.7064.1
		8	92.238.8074.1	92.238.8054.1	92.238.8064.1
Cable color:			□ white	□ white	□ white
Color of coding:	□ white	1	92.238.1074.2	92.238.1054.2	92.238.1064.2
Application:	mains 250 V	2	92.238.2074.2	92.238.2054.2	92.238.2064.2
Marking of poles:	L, N, PE	3	92.238.3074.2	92.238.3054.2	92.238.3064.2
		4	92.238.4074.2	92.238.4054.2	92.238.4064.2
		5	92.238.5074.2	92.238.5054.2	92.238.5064.2
		6	92.238.6074.2	92.238.6054.2	92.238.6064.2
		7	92.238.7074.2	92.238.7054.2	92.238.7064.2
		8	92.238.8074.2	92.238.8054.2	92.238.8064.2
Cable color:			■ black	■ black	■ black
Color of coding:	■ salmon pink	1	92.238.1074.5	92.238.1054.5	92.238.1064.5
Application:	mains 250 V	2	92.238.2074.5	92.238.2054.5	92.238.2064.5
Marking of poles:	L, N, PE	3	92.238.3074.5	92.238.3054.5	92.238.3064.5
		4	92.238.4074.5	92.238.4054.5	92.238.4064.5
		5	92.238.5074.5	92.238.5054.5	92.238.5064.5
		6	92.238.6074.5	92.238.6054.5	92.238.6064.5
		7	92.238.7074.5	92.238.7054.5	92.238.7064.5
		8	92.238.8074.5	92.238.8054.5	92.238.8064.5
Cable color:			■ black	■ black	■ black
Color of coding:	■ brown	1	92.238.1074.4	92.238.1054.4	92.238.1064.4
Application:	switch funktion 250 V	2	92.238.2074.4	92.238.2054.4	92.238.2064.4
		3	92.238.3074.4	92.238.3054.4	92.238.3064.4
Marking of poles:	1, 2, 3	4	92.238.4074.4	92.238.4054.4	92.238.4064.4
		5	92.238.5074.4	92.238.5054.4	92.238.5064.4
		6	92.238.6074.4	92.238.6054.4	92.238.6064.4
		7	92.238.7074.4	92.238.7054.4	92.238.7064.4
		8	92.238.8074.4	92.238.8054.4	92.238.8064.4
Cable color:			■ black	■ black	■ black
Color of coding:	■ pebble grey	1	92.238.1074.3	92.238.1054.3	92.238.1064.3
Application:	UPS 250 V	2	92.238.2074.3	92.238.2054.3	92.238.2064.3
Marking of poles:	L, N, PE	3	92.238.3074.3	92.238.3054.3	92.238.3064.3
		4	92.238.4074.3	92.238.4054.3	92.238.4064.3
		5	92.238.5074.3	92.238.5054.3	92.238.5064.3
		6	92.238.6074.3	92.238.6054.3	92.238.6064.3
		7	92.238.7074.3	92.238.7054.3	92.238.7064.3
		8	92.238.8074.3	92.238.8054.3	92.238.8064.3
Cable color:			■ black	■ black	■ black
Color of coding:	■ may green	1	92.298.1074.7	92.298.1054.7	92.298.1064.7
Application:	customized (with PE)	2	92.298.2074.7	92.298.2054.7	92.298.2064.7
		3	92.298.3074.7	92.298.3054.7	92.298.3064.7
Marking of poles:	1, PE, 2/N	4	92.298.4074.7	92.298.4054.7	92.298.4064.7
		5	92.298.5074.7	92.298.5054.7	92.298.5064.7
		6	92.298.6074.7	92.298.6054.7	92.298.6064.7
		7	92.298.7074.7	92.298.7054.7	92.298.7064.7
		8	92.298.8074.7	92.298.8054.7	92.298.8064.7

GST18I3, CABLE ASSEMBLY, 3-POLE

2.5 mm², 16 A

TECHNICAL DATA			
Rated voltage:	250 V	Lockable:	self-locking (unlocking by tool)
Rated current:	16 A		
Degree of protection (IP):	IP20	Additional technical data, see facts & data.	

mains connection cable, female - male CEE 7/4

		Length (m)	H05VV-F halogenated Eca Art.No.
Cable color:			■ black
Color of coding:	■ black	1	92.238.1007.1
Application:	mains 250 V	2	92.238.2007.1
Marking of poles:	L, N, PE	3	92.238.3007.1
		4	92.238.4007.1
		5	92.238.5007.1
		6	92.238.6007.1
		7	92.238.7007.1
		8	92.238.8007.1
Cable color:			□ white
Color of coding:	□ white	1	92.238.1007.2
Application:	mains 250 V	2	92.238.2007.2
Marking of poles:	L, N, PE	3	92.238.3007.2
		5	92.238.5007.2
		7	92.238.7007.2

Technical changes reserved

GST18I3, CABLE ASSEMBLY, 3-POLE

4 mm², 20 A

TECHNICAL DATA

Rated voltage:	250 V	Lockable:	self-locking (unlocking by tool)
Rated current:	20 A		
Degree of protection (IP):	IP20	Additional technical data, see facts & data.	

connecting cable, female - male

Cable color:
Color of coding: ■ black
Application: mains 250 V
Marking of poles: L, N, PE

Length (m)	H05VV-F halogenated Eca Art.No.	H05Z1Z1-F halogen free B2ca s1 d1 a1 Art.No.	H05Z1Z1-F halogen free Cca s1 d1 a1 Art.No.
	■ black	■ black	■ black
2	92.299.2000.1	92.299.2070.1	92.299.2050.1
4	92.299.4000.1	92.299.4070.1	92.299.4050.1
6	92.299.6000.1	92.299.6070.1	92.299.6050.1
8	92.299.8000.1	92.299.8070.1	92.299.8050.1

TECHNICAL DATA

Rated voltage:	250 V	Lockable:	self-locking (unlocking by tool)
Rated current:	20 A		
Degree of protection (IP):	IP20	Preparation of conductor ends:	ultrasonically compressed wire ends
		Additional technical data, see facts & data.	

connection cable, male - free end

Cable color:
Color of coding: ■ black
Application: mains 250 V
Marking of poles: L, N, PE

Length (m)	H05VV-F halogenated Eca Art.No.	H05Z1Z1-F halogen free B2ca s1 d1 a1 Art.No.	H05Z1Z1-F halogen free Cca s1 d1 a1 Art.No.
	■ black	■ black	■ black
2	92.299.2004.1	92.299.2074.1	92.299.2054.1
3	92.299.3004.1	92.299.3074.1	92.299.3054.1

GST18I4, CONNECTOR, 4-POLE

SCREW CONNECTION

TECHNICAL DATA

Rated voltage:	250 V / 400 V	Cross section fine-stranded:	0,75 mm² - 2,5 mm²
Rated current:	20 A	Connection cross section solid:	0,75 mm² - 2,5 mm²
Degree of protection (IP):	IP20	Additional technical data, see facts & data.	
Terminations per pole:	1		
Lockable:	self-locking (unlocking by tool)		

female **male**

for cables Ø 6.2-11.2 mm

Color of coding	Application	Marking of poles	female Art.No.	male Art.No.
☐ no-flame white	no-flame acc. IEC 60335-1	2, N, PE, 1	92.943.3057.0	92.944.3057.0

female **male**

for cables Ø 6.8-11.5 mm

Color of coding	Application	Marking of poles	female Art.No.	male Art.No.
■ black	mains 250/400 V	2, N, PE, 1	92.943.3053.1	92.944.3053.1
☐ white	mains 250/400 V	2, N, PE, 1	92.943.3053.0	92.944.3053.0
■ pebble grey	UPS 250/400 V	2, N, PE, 1	92.943.3553.0	92.944.3553.0
■ tomato red	UPS 250/400 V	2, N, PE, 1	92.943.3553.5	92.944.3553.5
■ may green	customized (with PE)	1, PE, 2/N, 3	92.943.3253.0	92.944.3253.0
■ turquoise blue	customized (without PE)	1, 2/N, 3, 4	92.943.3353.0*	92.944.3353.0*

*) Alternative technical data, see facts & data.

Technical changes reserved

GST18I4, CONNECTOR, 4-POLE

SPRING CLAMP CONNECTION

TECHNICAL DATA

Rated voltage:	250 V / 400 V	Cross section fine-stranded:	0,75 mm² - 1,5 mm²
Rated current:	20 A	Connection cross section solid:	0,75 mm² - 2,5 mm²
Degree of protection (IP):	IP20	Additional technical data, see facts & data.	
Terminations per pole:	2		
Lockable:	self-locking (unlocking by tool)		

female

for cables Ø 6.5-9 mm

Color of coding	Application	Marking of poles	female Art.No.
■ black	mains 250/400 V	2, N, PE, 1	92.943.1053.1
□ white	mains 250/400 V	2, N, PE, 1	92.943.1053.0

female **male**

for cables Ø 9.5-11.5 mm

Color of coding	Application	Marking of poles	female Art.No.	male Art.No.
■ black	mains 250/400 V	2, N, PE, 1	92.943.0053.1	92.944.0053.1
□ white	mains 250/400 V	2, N, PE, 1	92.943.0053.0	92.944.0053.0
■ pebble grey	UPS 250/400 V	2, N, PE, 1	92.943.0153.0	92.944.0153.0
■ tomato red	UPS 250/400 V	2, N, PE, 1	92.943.0153.5	92.944.0153.5
■ may green	customized (with PE)	1, PE, 2/N, 3	92.943.0353.0	92.944.0353.0
■ turquoise blue	customized (without PE)	1, 2/N, 3, 4	92.943.0453.0*	92.944.0453.0*

*) Alternative technical data, see facts & data.

GST18I4, DEVICE CONNECTOR, 4-POLE

SCREW CONNECTION

TECHNICAL DATA

Rated voltage:	250 V / 400 V	Cross section fine-stranded:	0,75 mm² - 4 mm²
Rated current:	20 A	Connection cross section solid:	0,75 mm² - 4 mm²
Degree of protection (IP):	IP20	Additional technical data, see facts & data.	
Terminations per pole:	1		
Lockable:	self-locking (unlocking by tool)		

female **male**

built-in component, single screw connection			female	male
Color of coding	Application	Marking of poles	Art.No.	Art.No.
■ black	mains 250/400 V	2, N, PE, 1	92.041.3253.1	92.042.3353.1
□ white	mains 250/400 V	2, N, PE, 1	92.041.3253.0	92.042.3353.0
■ pebble grey	UPS 250/400 V	2, 1, PE, N	92.041.3453.0	92.042.3453.0
■ tomato red	UPS 250/400 V	2, 1, PE, N	92.041.3453.5	92.042.3453.5
■ may green	customized (with PE)	1, PE, 2/N, 3	92.041.3553.0	92.042.3553.0
■ turquoise blue	customized (without PE)	1, 2/N, 3, 4	92.041.3953.0*	92.042.3953.0*

SPRING CLAMP CONNECTION

TECHNICAL DATA

Rated voltage:	250 V / 400 V	Cross section fine-stranded:	0,5 mm² - 1,5 mm²
Rated current:	20 A	Connection cross section solid:	0,5 mm² - 2,5 mm²
Degree of protection (IP):	IP20	Additional technical data, see facts & data.	
Terminations per pole:	2		
Lockable:	self-locking (unlocking by tool)		

female **male**

snap-in, housing material thickness 0.5-1.5 mm			female	male
Color of coding	Application	Marking of poles	Art.No.	Art.No.
■ black	mains 250/400 V	2, N, PE, 1	92.041.9658.1	92.042.9658.1
□ white	mains 250/400 V	2, N, PE, 1	92.041.9658.0	92.042.9658.0
■ pebble grey	UPS 250/400 V	2, N, PE, 1	92.041.9758.0	92.042.9758.0
■ tomato red	UPS 250/400 V	2, N, PE, 1	92.041.9758.5	92.042.9758.5
■ may green	customized (with PE)	1, PE, 2/N, 3	92.041.8058.0	92.042.8058.0
■ turquoise blue	customized (without PE)	1, 2/N, 3, 4	92.041.8258.0*	92.042.8258.0*

SOLDERING CONNECTION

TECHNICAL DATA

Rated voltage:	250 V / 400 V	Terminations per pole:	1
Rated current:	20 A	Lockable:	self-locking (unlocking by tool)
Degree of protection (IP):	IP20	Additional technical data, see facts & data.	

female **male**

solder connector, horizontal, without fastening flange			female	male
Color of coding	Application	Marking of poles	Art.No.	Art.No.
■ black	mains 250/400 V	2, N, PE, 1	92.043.0058.1	92.044.0058.1
□ white	mains 250/400 V	2, N, PE, 1	92.043.0058.0	92.044.0058.0
■ pebble grey	UPS 250/400 V	2, N, PE, 1	92.043.0158.0	92.044.0158.0
■ tomato red	UPS 250/400 V	2, N, PE, 1	92.043.0158.5	92.044.0158.5

female **male**

solder connector, vertical, without fastening flange			female	male
Color of coding	Application	Marking of poles	Art.No.	Art.No.
■ black	mains 250/400 V	2, N, PE, 1	92.041.0058.1	92.042.0058.1
□ white	mains 250/400 V	2, N, PE, 1	92.041.0058.0	92.042.0058.0
■ pebble grey	UPS 250/400 V	2, N, PE, 1	92.041.0158.0	92.042.0158.0

*) Alternative technical data, see facts & data.

Technical changes reserved

GST18I4, DISTRIBUTOR, 4-POLE

TECHNICAL DATA

Rated voltage:	250 V / 400 V	Lockable:	self-locking (unlocking by tool)
Rated current:	20 A		
Degree of protection (IP):	IP20	Additional technical data, see facts & data.	

H-distributor, with fastening option to 07.413.6853.1/0

Color of coding	Application	Marking of poles	Art.No.
■ black	mains 250/400 V	2, N, PE, 1	92.040.6953.1
□ white	mains 250/400 V	2, N, PE, 1	92.040.6953.0
■ pebble grey	UPS 250/400 V	2, N, PE, 1	92.040.7053.0
■ tomato red	UPS 250/400 V	2, N, PE, 1	92.040.7053.5
■ may green	customized (with PE)	1, PE, 2/N, 3	92.040.7253.0
■ turquoise blue	customized (without PE)	1, 2/N, 3, 4	92.040.7153.0*

T-distributor, without fastening option

Color of coding	Application	Marking of poles	Art.No.
■ black	mains 250/400 V	2, N, PE, 1	92.040.1053.1
□ white	mains 250/400 V	2, N, PE, 1	92.040.1053.0
■ pebble grey	UPS 250/400 V	2, N, PE, 1	92.040.1153.0
■ tomato red	UPS 250/400 V	2, N, PE, 1	92.040.1153.5

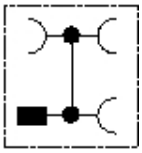

distributor box, IN GST18i4, OUT 3 x GST18i4, two levels

Color of coding	Application	Marking of poles	Art.No.
■ black	mains 250/400 V	2, 1, PE, N	99.502.0028.0

intermediate coupling, lockable, without fastening option

Color of coding	Application	Marking of poles	Art.No.
■ black	mains 250/400 V	2, N, PE, 1	99.453.9910.0

*) Alternative technical data, see facts & data.

GST18I4, CABLE ASSEMBLY, 4-POLE

1.5 mm², 16 A

TECHNICAL DATA

Rated voltage:	250 V / 400 V	Lockable:	self-locking (unlocking by tool)
Rated current:	16 A		
Degree of protection (IP):	IP20	Additional technical data, see facts & data.	

connecting cable, female - male

		Length (m)	H05VV-F halogenated Eca Art.No.	H05V2V2-F halogenated Eca Art.No.	H05Z1Z1-F halogen free B2ca s1 d1 a1 Art.No.
Cable color:			■ black	■ black	■ black
Color of coding:	■ black	1	92.207.1000.1		92.207.1070.1
Application:	mains 250/400 V	2	92.207.2000.1	92.207.2010.1	92.207.2070.1
Marking of poles:	2, N, PE, 1	3	92.207.3000.1	92.207.3010.1	92.207.3070.1
		4	92.207.4000.1	92.207.4010.1	92.207.4070.1
		5	92.207.5000.1	92.207.5010.1	92.207.5070.1
		6	92.207.6000.1		92.207.6070.1
		7	92.207.7000.1		92.207.7070.1
		8	92.207.8000.1		92.207.8070.1
Cable color:			□ white		□ white
Color of coding:	□ white	1	92.207.1000.2		92.207.1070.2
Application:	mains 250/400 V	2	92.207.2000.2		92.207.2070.2
Marking of poles:	2, N, PE, 1	3	92.207.3000.2		92.207.3070.2
		4	92.207.4000.2		92.207.4070.2
		5	92.207.5000.2		92.207.5070.2
		6	92.207.6000.2		92.207.6070.2
		7	92.207.7000.2		92.207.7070.2
		8	92.207.8000.2		92.207.8070.2
Cable color:			■ black		■ black
Color of coding:	■ pebble grey	1	92.207.1000.3		92.207.1070.3
Application:	UPS 250/400 V	2	92.207.2000.3		92.207.2070.3
Marking of poles:	2, N, PE, 1	3	92.207.3000.3		92.207.3070.3
		4	92.207.4000.3		92.207.4070.3
		5	92.207.5000.3		92.207.5070.3
		6	92.207.6000.3		92.207.6070.3
		7	92.207.7000.3		92.207.7070.3
		8	92.207.8000.3		92.207.8070.3
Cable color:			■ black		■ black
Color of coding:	■ tomato red	1	92.207.1000.0		92.207.1070.0
Application:	UPS 250/400 V	2	92.207.2000.0		92.207.2070.0
Marking of poles:	2, N, PE, 1	3	92.207.3000.0		92.207.3070.0
		4	92.207.4000.0		92.207.4070.0
		5	92.207.5000.0		92.207.5070.0
		6	92.207.6000.0		92.207.6070.0
		7	92.207.7000.0		92.207.7070.0
		8	92.207.8000.0		92.207.8070.0
Cable color:			■ black		■ black
Color of coding:	■ may green	1	92.207.1000.7		92.207.1070.7
Application:	customized (with PE)	2	92.207.2000.7		92.207.2070.7
		3	92.207.3000.7		92.207.3070.7
Marking of poles:	1, PE, 2/N, 3	4	92.207.4000.7		92.207.4070.7
		5	92.207.5000.7		92.207.5070.7
		6	92.207.6000.7		92.207.6070.7
		7	92.207.7000.7		92.207.7070.7
		8	92.207.8000.7		92.207.8070.7

Technical changes reserved

GST18I4, CABLE ASSEMBLY, 4-POLE

1.5 mm², 16 A

TECHNICAL DATA

Rated voltage:	250 V / 400 V	Lockable:	self-locking (unlocking by tool)
Rated current:	16 A		
Degree of protection (IP):	IP20	Additional technical data, see facts & data.	

connecting cable, female - male

		Length (m)	H05Z1Z1-F halogen free Cca s1 d1 a1 Art.No.	H05Z1Z1-F halogen free Eca Art.No.
Cable color:			■ black	■ black
Color of coding:	■ black	1	92.207.1050.1	92.207.1060.1
Application:	mains 250/400 V	2	92.207.2050.1	92.207.2060.1
Marking of poles:	2, N, PE, 1	3	92.207.3050.1	92.207.3060.1
		4	92.207.4050.1	92.207.4060.1
		5	92.207.5050.1	92.207.5060.1
		6	92.207.6050.1	92.207.6060.1
		7	92.207.7050.1	92.207.7060.1
		8	92.207.8050.1	92.207.8060.1
Cable color:			□ white	□ white
Color of coding:	□ white	1	92.207.1050.2	92.207.1060.2
Application:	mains 250/400 V	2	92.207.2050.2	92.207.2060.2
Marking of poles:	2, N, PE, 1	3	92.207.3050.2	92.207.3060.2
		4	92.207.4050.2	92.207.4060.2
		5	92.207.5050.2	92.207.5060.2
		6	92.207.6050.2	92.207.6060.2
		7	92.207.7050.2	92.207.7060.2
		8	92.207.8050.2	92.207.8060.2
Cable color:			■ black	■ black
Color of coding:	■ pebble grey	1	92.207.1050.3	
Application:	UPS 250/400 V	2	92.207.2050.3	92.207.2060.3
Marking of poles:	2, N, PE, 1	3	92.207.3050.3	92.207.3060.3
		4	92.207.4050.3	92.207.4060.3
		5	92.207.5050.3	
		6	92.207.6050.3	92.207.6060.3
		7	92.207.7050.3	
		8	92.207.8050.3	92.207.8060.3
Cable color:			■ black	■ black
Color of coding:	■ tomato red	1	92.207.1050.0	92.207.1060.0
Application:	UPS 250/400 V	2	92.207.2050.0	92.207.2060.0
Marking of poles:	2, N, PE, 1	3	92.207.3050.0	92.207.3060.0
		4	92.207.4050.0	92.207.4060.0
		5	92.207.5050.0	92.207.5060.0
		6	92.207.6050.0	92.207.6060.0
		7	92.207.7050.0	92.207.7060.0
		8	92.207.8050.0	92.207.8060.0
Cable color:			■ black	■ black
Color of coding:	■ may green	1	92.207.1050.7	92.207.1060.7
Application:	customized (with PE)	2	92.207.2050.7	92.207.2060.7
		3	92.207.3050.7	92.207.3060.7
Marking of poles:	1, PE, 2/N, 3	4	92.207.4050.7	92.207.4060.7
		5	92.207.5050.7	92.207.5060.7
		6	92.207.6050.7	92.207.6060.7
		7	92.207.7050.7	92.207.7060.7
		8	92.207.8050.7	92.207.8060.7

GST18I4, CABLE ASSEMBLY, 4-POLE

1.5 mm², 16 A

TECHNICAL DATA

Rated voltage:	250 V / 400 V	Lockable:	self-locking (unlocking by tool)
Rated current:	16 A		
Degree of protection (IP):	IP20	Preparation of conductor ends:	ultrasonically compressed wire ends

Additional technical data, see facts & data.

connection cable, female - free end

		Length (m)	H05VV-F halogenated Eca Art.No.	H05V2V2-F halogenated Eca Art.No.	H05Z1Z1-F halogen free B2ca s1 d1 a1 Art.No.
Cable color:			■ black	■ black	■ black
Color of coding:	■ black	1	92.207.1003.1		92.207.1073.1
Application:	mains 250/400 V	2	92.207.2003.1	92.207.2013.1	92.207.2073.1
Marking of poles:	2, N, PE, 1	3	92.207.3003.1		92.207.3073.1
		4	92.207.4003.1		92.207.4073.1
		5	92.207.5003.1		92.207.5073.1
		6	92.207.6003.1		92.207.6073.1
		7	92.207.7003.1		92.207.7073.1
		8	92.207.8003.1		92.207.8073.1
Cable color:			□ white		□ white
Color of coding:	□ white	1	92.207.1003.2		92.207.1073.2
Application:	mains 250/400 V	2	92.207.2003.2		92.207.2073.2
Marking of poles:	2, N, PE, 1	3	92.207.3003.2		92.207.3073.2
		4	92.207.4003.2		92.207.4073.2
		5	92.207.5003.2		92.207.5073.2
		6	92.207.6003.2		92.207.6073.2
		7	92.207.7003.2		
		8	92.207.8003.2		
Cable color:			■ black		■ black
Color of coding:	■ pebble grey	1	92.207.1003.3		92.207.1073.3
Application:	UPS 250/400 V	2	92.207.2003.3		92.207.2073.3
Marking of poles:	2, N, PE, 1	4	92.207.4003.3		92.207.4073.3
		5	92.207.5003.3		
Cable color:			■ black		■ black
Color of coding:	■ tomato red	1	92.207.1003.0		92.207.1073.0
Application:	UPS 250/400 V	2	92.207.2003.0		92.207.2073.0
Marking of poles:	2, N, PE, 1	3	92.207.3003.0		92.207.3073.0
		4	92.207.4003.0		92.207.4073.0
		5	92.207.5003.0		92.207.5073.0
		6	92.207.6003.0		92.207.6073.0
		7	92.207.7003.0		92.207.7073.0
		8	92.207.8003.0		92.207.8073.0
Cable color:			■ black		■ black
Color of coding:	■ may green	1	92.207.1003.7		92.207.1073.7
Application:	customized (with PE)	2	92.207.2003.7		92.207.2073.7
		3	92.207.3003.7		92.207.3073.7
Marking of poles:	1, PE, 2/N, 3	4	92.207.4003.7		92.207.4073.7
		5	92.207.5003.7		92.207.5073.7
		6	92.207.6003.7		92.207.6073.7
		7	92.207.7003.7		92.207.7073.7
		8	92.207.8003.7		92.207.8073.7

Technical changes reserved

GST18I4, CABLE ASSEMBLY, 4-POLE

1.5 mm², 16 A

TECHNICAL DATA

Rated voltage:	250 V / 400 V	Lockable:	self-locking (unlocking by tool)
Rated current:	16 A		
Degree of protection (IP):	IP20	Preparation of conductor ends:	ultrasonically compressed wire ends

Additional technical data, see facts & data.

connection cable, female - free end

		Length (m)	H05Z1Z1-F halogen free Cca s1 d1 a1 Art.No.	H05Z1Z1-F halogen free Eca Art.No.
Cable color:			■ black	■ black
Color of coding:	■ black	1	92.207.1053.1	92.207.1063.1
Application:	mains 250/400 V	2	92.207.2053.1	92.207.2063.1
Marking of poles:	2, N, PE, 1	3	92.207.3053.1	92.207.3063.1
		4	92.207.4053.1	92.207.4063.1
		5	92.207.5053.1	92.207.5063.1
		6	92.207.6053.1	92.207.6063.1
		7	92.207.7053.1	92.207.7063.1
		8	92.207.8053.1	92.207.8063.1
Cable color:			□ white	□ white
Color of coding:	□ white	1	92.207.1053.2	92.207.1063.2
Application:	mains 250/400 V	2	92.207.2053.2	92.207.2063.2
Marking of poles:	2, N, PE, 1	3	92.207.3053.2	92.207.3063.2
		4	92.207.4053.2	92.207.4063.2
		5	92.207.5053.2	92.207.5063.2
		6	92.207.6053.2	92.207.6063.2
		7		
		8		
Cable color:			■ black	
Color of coding:	■ pebble grey	1	92.207.1053.3	
Application:	UPS 250/400 V	2	92.207.2053.3	
Marking of poles:	2, N, PE, 1	4	92.207.4053.3	
		5		
Cable color:			■ black	■ black
Color of coding:	■ tomato red	1	92.207.1053.0	92.207.1063.0
Application:	UPS 250/400 V	2	92.207.2053.0	92.207.2063.0
Marking of poles:	2, N, PE, 1	3	92.207.3053.0	92.207.3063.0
		4	92.207.4053.0	92.207.4063.0
		5	92.207.5053.0	92.207.5063.0
		6	92.207.6053.0	92.207.6063.0
		7	92.207.7053.0	92.207.7063.0
		8	92.207.8053.0	92.207.8063.0
Cable color:			■ black	■ black
Color of coding:	■ may green	1	92.207.1053.7	92.207.1063.7
Application:	customized (with PE)	2	92.207.2053.7	92.207.2063.7
		3	92.207.3053.7	92.207.3063.7
Marking of poles:	1, PE, 2/N, 3	4	92.207.4053.7	92.207.4063.7
		5	92.207.5053.7	92.207.5063.7
		6	92.207.6053.7	92.207.6063.7
		7	92.207.7053.7	92.207.7063.7
		8	92.207.8053.7	92.207.8063.7

GST18I4, CABLE ASSEMBLY, 4-POLE

1.5 mm², 16 A

TECHNICAL DATA

Rated voltage:	250 V / 400 V	Lockable:	self-locking (unlocking by tool)
Rated current:	16 A		
Degree of protection (IP):	IP20	Preparation of conductor ends:	ultrasonically compressed wire ends

Additional technical data, see facts & data.

connection cable, male - free end

		Length (m)	H05VV-F halogenated Eca Art.No.	H05V2V2-F halogenated Eca Art.No.	H05Z1Z1-F halogen free B2ca s1 d1 a1 Art.No.
Cable color:			■ black	■ black	■ black
Color of coding:	■ black	1	92.207.1004.1	92.207.1014.1	92.207.1074.1
Application:	mains 250/400 V	2	92.207.2004.1	92.207.2014.1	92.207.2074.1
Marking of poles:	2, N, PE, 1	3	92.207.3004.1	92.207.3014.1	92.207.3074.1
		4	92.207.4004.1	92.207.4014.1	92.207.4074.1
		5	92.207.5004.1	92.207.5014.1	92.207.5074.1
		6	92.207.6004.1		92.207.6074.1
		7	92.207.7004.1		92.207.7074.1
		8	92.207.8004.1		92.207.8074.1
Cable color:			□ white		□ white
Color of coding:	□ white	1	92.207.1004.2		92.207.1074.2
Application:	mains 250/400 V	2	92.207.2004.2		92.207.2074.2
Marking of poles:	2, N, PE, 1	3	92.207.3004.2		92.207.3074.2
		4	92.207.4004.2		92.207.4074.2
		5	92.207.5004.2		92.207.5074.2
		6	92.207.6004.2		92.207.6074.2
		7	92.207.7004.2		
		8	92.207.8004.2		92.207.8074.2
Cable color:			■ black		■ black
Color of coding:	■ pebble grey	1	92.207.1004.3		92.207.1074.3
Application:	UPS 250/400 V	2	92.207.2004.3		92.207.2074.3
Marking of poles:	2, N, PE, 1	3	92.207.3004.3		92.207.3074.3
		4	92.207.4004.3		92.207.4074.3
		5	92.207.5004.3		92.207.5074.3
		6	92.207.6004.3		92.207.6074.3
		7	92.207.7004.3		92.207.7074.3
		8	92.207.8004.3		92.207.8074.3
Cable color:			■ black		■ black
Color of coding:	■ tomato red	1	92.207.1004.0		92.207.1074.0
Application:	UPS 250/400 V	2	92.207.2004.0		92.207.2074.0
Marking of poles:	2, N, PE, 1	3	92.207.3004.0		92.207.3074.0
		4	92.207.4004.0		92.207.4074.0
		5	92.207.5004.0		92.207.5074.0
		6	92.207.6004.0		92.207.6074.0
		7	92.207.7004.0		92.207.7074.0
		8	92.207.8004.0		92.207.8074.0
Cable color:			■ black		■ black
Color of coding:	■ may green	1	92.207.1004.7		92.207.1074.7
Application:	customized (with PE)	2	92.207.2004.7		92.207.2074.7
		3	92.207.3004.7		92.207.3074.7
Marking of poles:	1, PE, 2/N, 3	4	92.207.4004.7		92.207.4074.7
		5	92.207.5004.7		92.207.5074.7
		6	92.207.6004.7		92.207.6074.7
		7	92.207.7004.7		92.207.7074.7
		8	92.207.8004.7		92.207.8074.7

Technical changes reserved

GST18I4, CABLE ASSEMBLY, 4-POLE

1.5 mm², 16 A

TECHNICAL DATA

Rated voltage:	250 V / 400 V	Lockable:	self-locking (unlocking by tool)
Rated current:	16 A		
Degree of protection (IP):	IP20	Preparation of conductor ends:	ultrasonically compressed wire ends

Additional technical data, see facts & data.

connection cable, male - free end

		Length (m)	H05Z1Z1-F halogen free Cca s1 d1 a1 Art.No.	H05Z1Z1-F halogen free Eca Art.No.
Cable color:			■ black	■ black
Color of coding:	■ black	1	92.207.1054.1	92.207.1064.1
Application:	mains 250/400 V	2	92.207.2054.1	92.207.2064.1
Marking of poles:	2, N, PE, 1	3	92.207.3054.1	92.207.3064.1
		4	92.207.4054.1	92.207.4064.1
		5	92.207.5054.1	92.207.5064.1
		6	92.207.6054.1	92.207.6064.1
		7	92.207.7054.1	92.207.7064.1
		8	92.207.8054.1	92.207.8064.1
Cable color:			□ white	□ white
Color of coding:	□ white	1	92.207.1054.2	92.207.1064.2
Application:	mains 250/400 V	2	92.207.2054.2	92.207.2064.2
Marking of poles:	2, N, PE, 1	3	92.207.3054.2	92.207.3064.2
		4	92.207.4054.2	92.207.4064.2
		5	92.207.5054.2	92.207.5064.2
		6	92.207.6054.2	92.207.6064.2
		7		92.207.7064.2
		8	92.207.8054.2	92.207.8064.2
Cable color:			■ black	■ black
Color of coding:	■ pebble grey	1	92.207.1054.3	92.207.1064.3
Application:	UPS 250/400 V	2	92.207.2054.3	92.207.2064.3
Marking of poles:	2, N, PE, 1	3	92.207.3054.3	92.207.3064.3
		4	92.207.4054.3	
		5	92.207.5054.3	
		6	92.207.6054.3	
		7	92.207.7054.3	
		8	92.207.8054.3	92.207.8064.3
Cable color:			■ black	■ black
Color of coding:	■ tomato red	1	92.207.1054.0	92.207.1064.0
Application:	UPS 250/400 V	2	92.207.2054.0	92.207.2064.0
Marking of poles:	2, N, PE, 1	3	92.207.3054.0	92.207.3064.0
		4	92.207.4054.0	92.207.4064.0
		5	92.207.5054.0	92.207.5064.0
		6	92.207.6054.0	92.207.6064.0
		7	92.207.7054.0	92.207.7064.0
		8	92.207.8054.0	92.207.8064.0
Cable color:			■ black	■ black
Color of coding:	■ may green	1	92.207.1054.7	92.207.1064.7
Application:	customized (with PE)	2	92.207.2054.7	92.207.2064.7
		3	92.207.3054.7	92.207.3064.7
Marking of poles:	1, PE, 2/N, 3	4	92.207.4054.7	92.207.4064.7
		5	92.207.5054.7	92.207.5064.7
		6	92.207.6054.7	92.207.6064.7
		7	92.207.7054.7	92.207.7064.7
		8	92.207.8054.7	92.207.8064.7

GST18I4, CABLE ASSEMBLY, 4-POLE

2.5 mm², 20 A

TECHNICAL DATA

Rated voltage:	250 V / 400 V	Lockable:	self-locking (unlocking by tool)
Rated current:	20 A		
Degree of protection (IP):	IP20	Additional technical data, see facts & data.	

connecting cable, female - male

Cable color:
Color of coding: ■ black
Application: mains 250/400 V
Marking of poles: 2, N, PE, 1

Length (m)	H05VV-F halogenated Eca Art.No.	H05Z1Z1-F halogen free B2ca s1 d1 a1 Art.No.	H05Z1Z1-F halogen free Cca s1 d1 a1 Art.No.
	■ black	■ black	■ black
1	92.208.1000.1	92.208.1070.1	92.208.1050.1
2	92.208.2000.1	92.208.2070.1	92.208.2050.1
3	92.208.3000.1	92.208.3070.1	92.208.3050.1
4	92.208.4000.1	92.208.4070.1	92.208.4050.1
5	92.208.5000.1	92.208.5070.1	92.208.5050.1
6	92.208.6000.1	92.208.6070.1	92.208.6050.1
7	92.208.7000.1	92.208.7070.1	92.208.7050.1
8	92.208.8000.1	92.208.8070.1	92.208.8050.1
	□ white		
1	92.208.1000.2		
2	92.208.2000.2		
4	92.208.4000.2		
5	92.208.5000.2		
6	92.208.6000.2		
7	92.208.7000.2		
8	92.208.8000.2		

Cable color:
Color of coding: □ white
Application: mains 250/400 V
Marking of poles: 2, N, PE, 1

connecting cable, female - male

Cable color:
Color of coding: ■ black
Application: mains 250/400 V
Marking of poles: 2, N, PE, 1

Length (m)	H05Z1Z1-F halogen free Eca Art.No.
	■ black
1	92.208.1060.1
2	92.208.2060.1
3	92.208.3060.1
4	92.208.4060.1
5	92.208.5060.1
6	92.208.6060.1
7	92.208.7060.1
8	92.208.8060.1
	□ white
1	
2	
4	92.208.4060.2
5	
6	
7	
8	

Cable color:
Color of coding: □ white
Application: mains 250/400 V
Marking of poles: 2, N, PE, 1

Technical changes reserved

GST18I4, CABLE ASSEMBLY, 4-POLE

2.5 mm², 20 A

TECHNICAL DATA

Rated voltage:	250 V / 400 V	Lockable:	self-locking (unlocking by tool)
Rated current:	20 A		
Degree of protection (IP):	IP20	Preparation of conductor ends:	ultrasonically compressed wire ends

Additional technical data, see facts & data.

connection cable, female - free end

Cable color:
Color of coding: ■ black
Application: mains 250/400 V
Marking of poles: 2, N, PE, 1

Cable color:
Color of coding: □ white
Application: mains 250/400 V
Marking of poles: 2, N, PE, 1

Length (m)	H05VV-F halogenated Eca Art.No.	H05Z1Z1-F halogen free Eca Art.No.
	■ black	
2	92.208.2003.1	
3	92.208.3003.1	
	□ white	□ white
1	92.208.1003.2	
2	92.208.2003.2	
3	92.208.3003.2	
4	92.208.4003.2	
5	92.208.5003.2	
6	92.208.6003.2	92.208.6063.2
7	92.208.7003.2	
8	92.208.8003.2	

connection cable, male - free end

Cable color:
Color of coding: ■ black
Application: mains 250/400 V
Marking of poles: 2, N, PE, 1

Cable color:
Color of coding: □ white
Application: mains 250/400 V
Marking of poles: 2, N, PE, 1

Length (m)	H05VV-F halogenated Eca Art.No.	H05Z1Z1-F halogen free B2ca s1 d1 a1 Art.No.	H05Z1Z1-F halogen free Cca s1 d1 a1 Art.No.
	■ black	■ black	■ black
1	92.208.1004.1	92.208.1074.1	92.208.1054.1
2	92.208.2004.1	92.208.2074.1	92.208.2054.1
3		92.208.3074.1	92.208.3054.1
4	92.208.4004.1	92.208.4074.1	92.208.4054.1
5	92.208.5004.1	92.208.5074.1	92.208.5054.1
7	92.208.7004.1		
8	92.208.8004.1		
	□ white		
1	92.208.1004.2		
2	92.208.2004.2		
3	92.208.3004.2		
4	92.208.4004.2		
5	92.208.5004.2		
6	92.208.6004.2		
7	92.208.7004.2		
8	92.208.8004.2		

GST18I4, CABLE ASSEMBLY, 4-POLE

2.5 mm², 20 A

TECHNICAL DATA

Rated voltage:	250 V / 400 V	Lockable:	self-locking (unlocking by tool)
Rated current:	20 A		
Degree of protection (IP):	IP20	Preparation of conductor ends:	ultrasonically compressed wire ends

Additional technical data, see facts & data.

connection cable, male - free end

Cable color:
Color of coding: ■ black
Application: mains 250/400 V
Marking of poles: 2, N, PE, 1

Cable color:
Color of coding: □ white
Application: mains 250/400 V
Marking of poles: 2, N, PE, 1

Length (m)	H05Z1Z1-F halogen free Eca Art.No.
	■ black
1	92.208.1064.1
2	92.208.2064.1
3	92.208.3064.1
4	92.208.4064.1
5	92.208.5064.1
7	
8	
	□ white
1	
2	
3	
4	
5	
6	92.208.6064.2
7	92.208.7064.2
8	

Technical changes reserved

GST18I5, CONNECTOR, 5-POLE

SCREW CONNECTION

TECHNICAL DATA

Rated voltage:	250 V / 400 V	Cross section fine-stranded:	0,75 mm² - 2,5 mm²
Rated current:	20 A	Connection cross section solid:	0,75 mm² - 2,5 mm²
Degree of protection (IP):	IP20	Additional technical data, see facts & data.	
Terminations per pole:	1		
Lockable:	self-locking (unlocking by tool)		

female **male**

with test tap, for cables Ø 7-13.5 mm

Color of coding	Application	Marking of poles	female Art.No.	male Art.No.
■ black	mains 250/400 V	3, N, PE, 2, 1	92.953.7053.1	92.954.7053.1
□ white	mains 250/400 V	3, N, PE, 2, 1	92.953.7053.0	92.954.7053.0
■ pastel blue	mains 250 V + not SELV	L, N, PE, D2, D1	92.953.7453.0	92.954.7453.0

female **male**

for cables Ø 7-13.5 mm

Color of coding	Application	Marking of poles	female Art.No.	male Art.No.
■ black	mains 250/400 V	3, N, PE, 2, 1	92.953.4053.1	92.954.4053.1
□ white	mains 250/400 V	3, N, PE, 2, 1	92.953.4053.0	92.954.4053.0
■ pastel blue	mains 250 V + not SELV	L, N, PE, D2, D1	92.953.4453.0	92.954.4453.0
■ light blue	SELV	1, 2, 3, 4, 5	92.953.4153.0*	92.954.4153.0*
■ pebble grey	UPS 250/400 V	3, N, PE, 2, 1	92.953.4553.0	92.954.4553.0
■ tomato red	UPS 250/400 V	3, N, PE, 2, 1	92.953.4553.5	92.954.4553.5
■ may green	customized (with PE)	1, 2, PE, 3/N, 4	92.953.4253.0	92.954.4253.0
■ turquoise blue	customized (without PE)	1, 2, 3, 4/N, 5	92.953.4353.0*	92.954.4353.0*

female **male**

for cables Ø 8-12.5 mm

Color of coding	Application	Marking of poles	female Art.No.	male Art.No.
□ no-flame white	no-flame acc. IEC 60335-1	3, N, PE, 2, 1	92.953.4057.0	92.954.4057.0

TECHNICAL DATA

Rated voltage:	250 V / 400 V	Cross section fine-stranded:	0,75 mm² - 4 mm²
Rated current:	20 A	Connection cross section solid:	0,75 mm² - 4 mm²
Degree of protection (IP):	IP20	Additional technical data, see facts & data.	
Terminations per pole:	1		
Lockable:	self-locking (unlocking by tool)		

female **male**

for cables Ø 11.5-15.5 mm

Color of coding	Application	Marking of poles	female Art.No.	male Art.No.
■ black	mains 250/400 V	3, N, PE, 2, 1	92.953.5053.1	92.954.5053.1
□ white	mains 250/400 V	3, N, PE, 2, 1	92.953.5053.0	92.954.5053.0
■ pastel blue	mains 250 V + not SELV	L, N, PE, D2, D1	92.953.5453.0	92.954.5453.0
■ light blue	SELV	1, 2, 3, 4, 5	92.953.5153.0*	92.954.5153.0*
■ pebble grey	UPS 250/400 V	3, N, PE, 2, 1	92.953.5553.0	92.954.5553.0
■ tomato red	UPS 250/400 V	3, N, PE, 2, 1	92.953.5553.5	92.954.5553.5
■ may green	customized (with PE)	1, 2, PE, 3/N, 4	92.953.5253.0	92.954.5253.0
■ turquoise blue	customized (without PE)	1, 2, 3, 4/N, 5	92.953.5353.0*	92.954.5353.0*

*) Alternative technical data, see facts & data.

Technical changes reserved

GST18I5, DEVICE CONNECTOR, 5-POLE

SCREW CONNECTION

TECHNICAL DATA

Rated voltage:	250 V / 400 V	Cross section fine-stranded:	0,75 mm² - 4 mm²
Rated current:	20 A	Connection cross section solid:	0,75 mm² - 4 mm²
Degree of protection (IP):	IP20	Additional technical data, see facts & data.	
Terminations per pole:	1		
Lockable:	self-locking (unlocking by tool)		

female **male**

built-in component, single screw connection			female	male
Color of coding	**Application**	**Marking of poles**	**Art.No.**	**Art.No.**
■ black	mains 250/400 V	3, N, PE, 2, 1	92.051.3253.1	92.052.3353.1
□ white	mains 250/400 V	3, N, PE, 2, 1	92.051.3253.0	92.052.3353.0
■ pastel blue	mains 250 V + not SELV	L, N, PE, D2, D1	92.051.3753.0	92.052.3753.0
■ light blue	SELV	1, 2, 3, 4, 5	92.051.3153.0*	92.052.3153.0*
■ pebble grey	UPS 250/400 V	1, 2, 3, N, PE	92.051.3453.0	92.052.3453.0
■ tomato red	UPS 250/400 V	1, 2, 3, N, PE	92.051.3453.5	92.052.3453.5
■ may green	customized (with PE)	1, 2, PE, 3/N, 4	92.051.3553.0	92.052.3553.0
■ turquoise blue	customized (without PE)	1, 2, 3, 4/N, 5	92.051.3953.0*	92.052.3953.0*
□ no-flame white	no-flame acc. IEC 60335-1	3, N, PE, 2, 1	92.051.3257.0	

SPRING CLAMP CONNECTION

TECHNICAL DATA

Rated voltage:	250 V / 400 V	Cross section fine-stranded:	0,5 mm² - 1,5 mm²
Rated current:	20 A	Connection cross section solid:	0,5 mm² - 2,5 mm²
Degree of protection (IP):	IP20	Additional technical data, see facts & data.	
Terminations per pole:	2		
Lockable:	self-locking (unlocking by tool)		

female **male**

snap-in, housing material thickness 0.5-1.5 mm			female	male
Color of coding	**Application**	**Marking of poles**	**Art.No.**	**Art.No.**
■ black	mains 250/400 V	3, N, PE, 2, 1	92.051.9658.1	92.052.9658.1
□ white	mains 250/400 V	3, N, PE, 2, 1	92.051.9658.0	92.052.9658.0
■ pastel blue	mains 250 V + not SELV	L, N, PE, D2, D1	92.051.8658.0	92.052.8658.0
■ light blue	SELV	1, 2, 3, 4, 5	92.051.8358.0*	92.052.8358.0*
■ pebble grey	UPS 250/400 V	1, 2, 3, N, PE	92.051.9758.0	92.052.9758.0
■ tomato red	UPS 250/400 V	1, 2, 3, N, PE	92.051.9758.5	92.052.9758.5
■ may green	customized (with PE)	1, 2, PE, 3/N, 4	92.051.8058.0	92.052.8058.0
■ turquoise blue	customized (without PE)	1, 2, 3, 4/N, 5	92.051.8258.0*	92.052.8258.0*

SOLDERING CONNECTION

TECHNICAL DATA

Rated voltage:	250 V / 400 V	Terminations per pole:	1
Rated current:	20 A	Lockable:	self-locking (unlocking by tool)
Degree of protection (IP):	IP20	Additional technical data, see facts & data.	

female **male**

solder connector, horizontal, without fastening flange			female	male
Color of coding	**Application**	**Marking of poles**	**Art.No.**	**Art.No.**
■ black	mains 250/400 V	3, N, PE, 2, 1	92.053.0058.1	92.054.0058.1
□ white	mains 250/400 V	3, N, PE, 2, 1	92.053.0058.0	92.054.0058.0
■ pastel blue	mains 250 V + not SELV	D1, D2, L, PE, N	92.053.0458.0	92.054.0458.0
■ light blue	SELV	1, 2, 3, 4, 5	92.053.0258.0*	

*) Alternative technical data, see facts & data.

GST18I5, DEVICE CONNECTOR, 5-POLE

SOLDERING CONNECTION

TECHNICAL DATA

Rated voltage:	250 V / 400 V	Terminations per pole:	1
Rated current:	20 A	Lockable:	self-locking (unlocking by tool)
Degree of protection (IP):	IP20		

Additional technical data, see facts & data.

female

male

solder connector, vertical, without fastening flange

Color of coding	Application	Marking of poles	female Art.No.	male Art.No.
■ black	mains 250/400 V	3, N, PE, 2, 1	92.051.0058.1	92.052.0058.1
□ white	mains 250/400 V	3, N, PE, 2, 1	92.051.0058.0	92.052.0058.0
■ pastel blue	mains 250 V + not SELV	D1, D2, L, PE, N	92.051.0458.0	92.052.0458.0
■ light blue	SELV	1, 2, 3, 4, 5	92.051.0258.0*	

*) Alternative technical data, see facts & data.

Technical changes reserved

GST18I5, DISTRIBUTOR, 5-POLE

TECHNICAL DATA			
Rated voltage:	250 V / 400 V	Lockable:	self-locking (unlocking by tool)
Rated current:	20 A		
Degree of protection (IP):	IP20	Additional technical data, see facts & data.	

H-distributor, with fastening option to 07.413.6853.1/0

Color of coding	Application	Marking of poles	Art.No.
■ black	mains 250/400 V	3, N, PE, 2, 1	92.050.6953.1
□ white	mains 250/400 V	3, N, PE, 2, 1	92.050.6953.0
■ pastel blue	mains 250 V + not SELV	L, N, PE, D2, D1	92.050.7453.0
■ light blue	SELV	1, 2, 3, 4, 5	92.050.7353.0*
■ pebble grey	UPS 250/400 V	3, N, PE, 2, 1	92.050.7053.0
■ tomato red	UPS 250/400 V	3, N, PE, 2, 1	92.050.7053.5
■ may green	customized (with PE)	1, 2, PE, 3/N, 4	92.050.7253.0
■ turquoise blue	customized (without PE)	1, 2, 3, 4/N, 5	92.050.7153.0*

phase selection distributor, with fastening option to 07.413.6853.1/0

Color of coding	Application	Marking of poles	Art.No.
■ black	mains 250/400 V	3, N, PE, 2, 1	92.050.0153.1
□ white	mains 250/400 V	3, N, PE, 2, 1	92.050.0153.0
■ pebble grey	UPS 250/400 V	1, 2, 3, N, PE	92.050.2153.0
■ tomato red	UPS 250/400 V	1, 2, 3, N, PE	92.050.2153.5

T-distributor, with fastening option to 07.413.6853.1/0, cascadable

Color of coding	Application	Marking of poles	Art.No.
■ black	mains 250/400 V	3, N, PE, 2, 1	92.050.3053.1
□ white	mains 250/400 V	3, N, PE, 2, 1	92.050.3053.0
■ pastel blue	mains 250 V + not SELV	L, N, PE, D2, D1	92.050.3453.0
■ pebble grey	UPS 250/400 V	3, N, PE, 2, 1	92.050.3553.0
■ tomato red	UPS 250/400 V	3, N, PE, 2, 1	92.050.3553.5

T-Distributor for phase selection L1, with fastening option to 07.413.6853.1/0, cascadable

Color of coding	Application	Marking of poles	Art.No.
■ black	mains 250/400 V	3, N, PE, 2, 1	92.050.3153.1
□ white	mains 250/400 V	3, N, PE, 2, 1	92.050.3153.0
■ pebble grey	UPS 250/400 V	3, N, PE, 2, 1	92.050.3653.0
■ tomato red	UPS 250/400 V	3, N, PE, 2, 1	92.050.3653.5

T-Distributor for phase selection L2, with fastening option to 07.413.6853.1/0, cascadable

Color of coding	Application	Marking of poles	Art.No.
■ black	mains 250/400 V	3, N, PE, 2, 1	92.050.3253.1
□ white	mains 250/400 V	3, N, PE, 2, 1	92.050.3253.0
■ pebble grey	UPS 250/400 V	3, N, PE, 2, 1	92.050.3753.0
■ tomato red	UPS 250/400 V	3, N, PE, 2, 1	92.050.3753.5

T-Distributor for phase selection L3, with fastening option to 07.413.6853.1/0, cascadable

Color of coding	Application	Marking of poles	Art.No.
■ black	mains 250/400 V	3, N, PE, 2, 1	92.050.3353.1
□ white	mains 250/400 V	3, N, PE, 2, 1	92.050.3353.0
■ pebble grey	UPS 250/400 V	3, N, PE, 2, 1	92.050.3853.0
■ tomato red	UPS 250/400 V	3, N, PE, 2, 1	92.050.3853.5

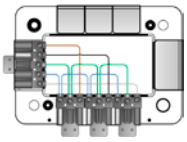

distributor box, IN GST18i5, OUT 3 x GST18i3

Color of coding	Application	Marking of poles	Art.No.
■ black	mains 250/400 V	1, 2, PE, 3, 4/N	99.220.0028.0

*) Alternative technical data, see facts & data.

GST18I5, DISTRIBUTOR, 5-POLE

TECHNICAL DATA			
Rated voltage:	250 V	Lockable:	self-locking (unlocking by tool)
Rated current:	20 A		
Degree of protection (IP):	IP20	Additional technical data, see facts & data.	

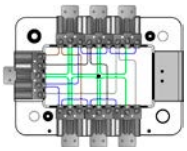

distributor box, IN GST18i5, OUT 6 x GST18i3

Color of coding	Application	Marking of poles	Art.No.
■ black	mains 250 V	L, N, PE	99.246.0028.0

TECHNICAL DATA			
Rated voltage:	250 V / 400 V	Lockable:	self-locking (unlocking by tool)
Rated current:	20 A		
Degree of protection (IP):	IP20	Additional technical data, see facts & data.	

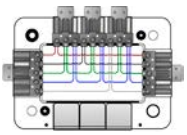

distributor box, IN GST18i5, OUT 3 x GST18i3 & 1 x GST18i5

Color of coding	Application	Marking of poles	Art.No.
■ black	mains 250/400 V	1, 2, PE, 3, 4/N	99.157.0028.0
□ white	mains 250/400 V	1, 2, PE, 3, 4/N	99.323.0028.0
black and salmon pink	mains 250/400 V	1, 2, PE, 3, 4/N	99.326.0028.0

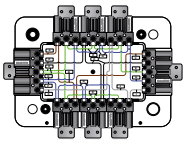

distributor box, IN GST18i5, OUT 6 x GST18i3 & 1 x GST18i5

Color of coding	Application	Marking of poles	Art.No.
■ black	mains 250/400 V	1, 2, PE, 3, 4/N	99.237.0028.0
□ white	mains 250/400 V	1, 2, PE, 3, 4/N	99.324.0028.0
black and salmon pink	mains 250/400 V	1, 2, PE, 3, 4/N	99.281.0028.0

gesis® LINECT

Color of coding	Application	Marking of poles	Art.No.
■ pastel blue	mains 250 V + not SELV	L, N, PE, D2, D1	92.050.2453.0

Technical changes reserved

GST18I5, CABLE ASSEMBLY, 5-POLE

0.75 mm², 6 A

TECHNICAL DATA

Rated voltage:	250 V / 400 V	Lockable:	self-locking (unlocking by tool)
Rated current:	6 A		
Degree of protection (IP):	IP20	Preparation of conductor ends:	ultrasonically compressed wire ends

Additional technical data, see facts & data.

connection cable, male - free end

H05Z1Z1-F
halogen free

Cable color:
Color of coding: ☐ white
Application: mains 250/400 V
Marking of poles: 1, 2, 3, N, PE

Length (m)	Art.No.
	☐ white
1	92.255.1064.2
2	92.255.2064.2
3	92.255.3064.2
4	92.255.4064.2
5	92.255.5064.2
6	92.255.6064.2
7	92.255.7064.2
8	92.255.8064.2

GST18I5, CABLE ASSEMBLY, 5-POLE

1 mm², 10 A

TECHNICAL DATA

Rated voltage:	250 V / 400 V	Lockable:	self-locking (unlocking by tool)
Rated current:	10 A		
Degree of protection (IP):	IP20	Preparation of conductor ends:	ultrasonically compressed wire ends

Additional technical data, see facts & data.

connection cable, male - free end

		Length (m)	H05Z1Z1-F halogen free Eca Art.No.	H05VV-F halogenated Art.No.
Cable color:			☐ white	
Color of coding:	☐ white	1	92.256.1064.2	
Application:	mains 250/400 V	2	92.256.2064.2	
Marking of poles:	1, 2, 3, N, PE	3	92.256.3064.2	
		4	92.256.4064.2	
		5	92.256.5064.2	
		6	92.256.6064.2	
		7	92.256.7064.2	
		8	92.256.8064.2	
Cable color:				■ black
Color of coding:	■ pastel blue	0.5		92.256.0504.9
Application:	mains 250 V + not SELV			
Marking of poles:	L, N, PE, D2, D1			

Technical changes reserved

GST18I5, CABLE ASSEMBLY, 5-POLE

1.5 mm², 16 A

TECHNICAL DATA

Rated voltage:	250 V / 400 V	Lockable:	self-locking (unlocking by tool)
Rated current:	16 A		
Degree of protection (IP):	IP20	Additional technical data, see facts & data.	

connecting cable, female - male with test tap

		Length (m)	H05Z1Z1-F halogen free Eca Art.No.
Cable color:			■ black
Color of coding:	■ black	1	92.357.1060.1
Application:	mains 250/400 V	3	92.357.3060.1
Marking of poles:	3, N, PE, 2, 1	4	92.357.4060.1
		5	92.357.5060.1
		6	92.357.6060.1
		7	92.357.7060.1
		8	92.357.8060.1
Cable color:			■ black
Color of coding:	■ pastel blue	1	92.357.1060.9
Application:	mains 250 V + not SELV	2	92.357.2060.9
		3	92.357.3060.9
Marking of poles:	L, N, PE, D2, D1	4	92.357.4060.9
		5	92.357.5060.9
		6	92.357.6060.9
		7	92.357.7060.9
		8	92.357.8060.9

TECHNICAL DATA

Rated voltage:	250 V / 400 V	Lockable:	self-locking (unlocking by tool)
Rated current:	16 A		
Degree of protection (IP):	IP20	Preparation of conductor ends:	ultrasonically compressed wire ends
		Additional technical data, see facts & data.	

connection cable, female - free end with test tap

		Length (m)	H05Z1Z1-F halogen free Eca Art.No.
Cable color:			■ black
Color of coding:	■ black	1	92.357.1063.1
Application:	mains 250/400 V	2	92.357.2063.1
Marking of poles:	3, N, PE, 2, 1	3	92.357.3063.1
		4	92.357.4063.1
		7	92.357.7063.1
Cable color:			■ black
Color of coding:	■ pastel blue	2	92.357.2063.9
Application:	mains 250 V + not SELV	3	92.357.3063.9
		4	92.357.4063.9
Marking of poles:	L, N, PE, D2, D1	5	92.357.5063.9
		6	92.357.6063.9
		7	92.357.7063.9
		8	92.357.8063.9

GST18I5, CABLE ASSEMBLY, 5-POLE

1.5 mm², 16 A

TECHNICAL DATA			
Rated voltage:	250 V / 400 V	Lockable:	self-locking (unlocking by tool)
Rated current:	16 A		
Degree of protection (IP):	IP20	Preparation of conductor ends:	ultrasonically compressed wire ends
		Additional technical data, see facts & data.	

connection cable, male - free end with test tap

		Length (m)	H05Z1Z1-F halogen free Eca Art.No.
Cable color:			■ black
Color of coding:	■ black	3	92.357.3064.1
Application:	mains 250/400 V	7	92.357.7064.1
Marking of poles:	3, N, PE, 2, 1		
Cable color:			■ black
Color of coding:	■ pastel blue	1	92.357.1064.9
Application:	mains 250 V + not SELV	2	92.357.2064.9
		3	92.357.3064.9
Marking of poles:	L, N, PE, D2, D1	4	92.357.4064.9
		5	92.357.5064.9
		6	92.357.6064.9
		7	92.357.7064.9
		8	92.357.8064.9

*) Alternative technical data, see facts & data.

Technical changes reserved

GST18I5, CABLE ASSEMBLY, 5-POLE

1.5 mm², 16 A

TECHNICAL DATA

Rated voltage:	250 V / 400 V	Lockable:	self-locking (unlocking by tool)
Rated current:	16 A		
Degree of protection (IP):	IP20	Additional technical data, see facts & data.	

connecting cable, female - male

		Length (m)	H05VV-F halogenated Eca Art.No.	H05V2V2-F halogenated Eca Art.No.	H05Z1Z1-F halogen free B2ca s1 d1 a1 Art.No.
Cable color:			■ black	■ black	■ black
Color of coding:	■ black	1	92.257.1000.1		92.257.1070.1
Application:	mains 250/400 V	2	92.257.2000.1	92.257.2010.1	92.257.2070.1
Marking of poles:	3, N, PE, 2, 1	3	92.257.3000.1	92.257.3010.1	92.257.3070.1
		4	92.257.4000.1	92.257.4010.1	92.257.4070.1
		5	92.257.5000.1	92.257.5010.1	92.257.5070.1
		6	92.257.6000.1		92.257.6070.1
		7	92.257.7000.1		92.257.7070.1
		8	92.257.8000.1		92.257.8070.1
Cable color:			□ white		□ white
Color of coding:	□ white	1	92.257.1000.2		92.257.1070.2
Application:	mains 250/400 V	2	92.257.2000.2		92.257.2070.2
Marking of poles:	3, N, PE, 2, 1	3	92.257.3000.2		92.257.3070.2
		4	92.257.4000.2		92.257.4070.2
		5	92.257.5000.2		92.257.5070.2
		6	92.257.6000.2		92.257.6070.2
		7	92.257.7000.2		92.257.7070.2
		8	92.257.8000.2		92.257.8070.2
Cable color:			■ black		■ black
Color of coding:	■ pastel blue	1	92.257.1000.9		92.257.1070.9
Application:	mains 250 V + not SELV	2	92.257.2000.9		92.257.2070.9
		3	92.257.3000.9		92.257.3070.9
Marking of poles:	L, N, PE, D2, D1	4	92.257.4000.9		92.257.4070.9
		5	92.257.5000.9		92.257.5070.9
		6	92.257.6000.9		92.257.6070.9
		7	92.257.7000.9		92.257.7070.9
		8	92.257.8000.9		92.257.8070.9
Cable color:			■ black		■ black
Color of coding:	■ tomato red	1	92.257.1000.0		92.257.1070.0
Application:	UPS 250/400 V	2	92.257.2000.0		92.257.2070.0
Marking of poles:	3, N, PE, 2, 1	3	92.257.3000.0		92.257.3070.0
		4	92.257.4000.0		92.257.4070.0
		5	92.257.5000.0		92.257.5070.0
		6	92.257.6000.0		92.257.6070.0
		7	92.257.7000.0		92.257.7070.0
		8	92.257.8000.0		92.257.8070.0
Cable color:			■ black		■ black
Color of coding:	■ may green	1	92.257.1000.7		92.257.1070.7
Application:	customized (with PE)	2	92.257.2000.7		92.257.2070.7
		3	92.257.3000.7		92.257.3070.7
Marking of poles:	1, 2, PE, 3/N, 4	4	92.257.4000.7		92.257.4070.7
		5	92.257.5000.7		92.257.5070.7
		6	92.257.6000.7		92.257.6070.7
		7	92.257.7000.7		92.257.7070.7
		8	92.257.8000.7		92.257.8070.7
Cable color:			■ black		■ black
Color of coding:	■ turquoise blue	1	92.257.1000.8*		92.257.1070.8*
Application:	customized (without PE)	2	92.257.2000.8*		92.257.2070.8*
		3	92.257.3000.8*		92.257.3070.8*
Marking of poles:	1, 2, 3, 4/N, 5	4	92.257.4000.8*		92.257.4070.8*
		5	92.257.5000.8*		92.257.5070.8*
		6	92.257.6000.8*		92.257.6070.8*
		7	92.257.7000.8*		92.257.7070.8*
		8	92.257.8000.8*		92.257.8070.8*

*) Alternative technical data, see facts & data.

GST18I5, CABLE ASSEMBLY, 5-POLE

1.5 mm², 16 A

TECHNICAL DATA

Rated voltage:	250 V / 400 V	Lockable:	self-locking (unlocking by tool)
Rated current:	16 A		
Degree of protection (IP):	IP20	Additional technical data, see facts & data.	

connecting cable, female - male

		Length (m)	H05Z1Z1-F halogen free Cca s1 d1 a1 Art.No.	H05Z1Z1-F halogen free Eca Art.No.
Cable color:			■ black	■ black
Color of coding:	■ black	1	92.257.1050.1	92.257.1060.1
Application:	mains 250/400 V	2	92.257.2050.1	92.257.2060.1
Marking of poles:	3, N, PE, 2, 1	3	92.257.3050.1	92.257.3060.1
		4	92.257.4050.1	92.257.4060.1
		5	92.257.5050.1	92.257.5060.1
		6	92.257.6050.1	92.257.6060.1
		7	92.257.7050.1	92.257.7060.1
		8	92.257.8050.1	92.257.8060.1
Cable color:			□ white	□ white
Color of coding:	□ white	1	92.257.1050.2	92.257.1060.2
Application:	mains 250/400 V	2	92.257.2050.2	92.257.2060.2
Marking of poles:	3, N, PE, 2, 1	3	92.257.3050.2	92.257.3060.2
		4	92.257.4050.2	92.257.4060.2
		5	92.257.5050.2	92.257.5060.2
		6	92.257.6050.2	92.257.6060.2
		7	92.257.7050.2	92.257.7060.2
		8	92.257.8050.2	92.257.8060.2
Cable color:			■ black	■ black
Color of coding:	■ pastel blue	1	92.257.1050.9	92.257.1060.9
Application:	mains 250 V + not SELV	2	92.257.2050.9	92.257.2060.9
		3	92.257.3050.9	92.257.3060.9
Marking of poles:	L, N, PE, D2, D1	4	92.257.4050.9	92.257.4060.9
		5	92.257.5050.9	92.257.5060.9
		6	92.257.6050.9	92.257.6060.9
		7	92.257.7050.9	92.257.7060.9
		8	92.257.8050.9	92.257.8060.9
Cable color:			■ black	■ black
Color of coding:	■ tomato red	1	92.257.1050.0	92.257.1060.0
Application:	UPS 250/400 V	2	92.257.2050.0	92.257.2060.0
Marking of poles:	3, N, PE, 2, 1	3	92.257.3050.0	92.257.3060.0
		4	92.257.4050.0	92.257.4060.0
		5	92.257.5050.0	92.257.5060.0
		6	92.257.6050.0	92.257.6060.0
		7	92.257.7050.0	92.257.7060.0
		8	92.257.8050.0	92.257.8060.0
Cable color:			■ black	■ black
Color of coding:	■ may green	1	92.257.1050.7	92.257.1060.7
Application:	customized (with PE)	2	92.257.2050.7	92.257.2060.7
		3	92.257.3050.7	92.257.3060.7
Marking of poles:	1, 2, PE, 3/N, 4	4	92.257.4050.7	92.257.4060.7
		5	92.257.5050.7	92.257.5060.7
		6	92.257.6050.7	92.257.6060.7
		7	92.257.7050.7	92.257.7060.7
		8	92.257.8050.7	92.257.8060.7
Cable color:			■ black	■ black
Color of coding:	■ turquoise blue	1	92.257.1050.8*	92.257.1060.8*
Application:	customized (without PE)	2	92.257.2050.8*	92.257.2060.8*
		3	92.257.3050.8*	92.257.3060.8*
Marking of poles:	1, 2, 3, 4/N, 5	4	92.257.4050.8*	92.257.4060.8*
		5	92.257.5050.8*	92.257.5060.8*
		6	92.257.6050.8*	92.257.6060.8*
		7	92.257.7050.8*	92.257.7060.8*
		8	92.257.8050.8*	92.257.8060.8*

*) Alternative technical data, see facts & data.

Technical changes reserved

GST18I5, CABLE ASSEMBLY, 5-POLE

1.5 mm², 16 A

TECHNICAL DATA

Rated voltage:	250 V / 400 V	Lockable:	self-locking (unlocking by tool)
Rated current:	16 A		
Degree of protection (IP):	IP20	Preparation of conductor ends:	ultrasonically compressed wire ends

Additional technical data, see facts & data.

connection cable, female - free end

		Length (m)	H05VV-F halogenated Eca Art.No.	H05Z1Z1-F halogen free B2ca s1 d1 a1 Art.No.	H05Z1Z1-F halogen free Cca s1 d1 a1 Art.No.
Cable color:			■ black	■ black	■ black
Color of coding:	■ black	1	92.257.1003.1	92.257.1073.1	92.257.1053.1
Application:	mains 250/400 V	2	92.257.2003.1	92.257.2073.1	92.257.2053.1
Marking of poles:	3, N, PE, 2, 1	3	92.257.3003.1	92.257.3073.1	92.257.3053.1
		4	92.257.4003.1	92.257.4073.1	92.257.4053.1
		5	92.257.5003.1	92.257.5073.1	92.257.5053.1
		6	92.257.6003.1	92.257.6073.1	92.257.6053.1
		7	92.257.7003.1	92.257.7073.1	92.257.7053.1
		8	92.257.8003.1	92.257.8073.1	92.257.8053.1
Cable color:			□ white	□ white	□ white
Color of coding:	□ white	1	92.257.1003.2	92.257.1073.2	92.257.1053.2
Application:	mains 250/400 V	2	92.257.2003.2	92.257.2073.2	92.257.2053.2
Marking of poles:	3, N, PE, 2, 1	3	92.257.3003.2	92.257.3073.2	92.257.3053.2
		4	92.257.4003.2	92.257.4073.2	92.257.4053.2
		5	92.257.5003.2	92.257.5073.2	92.257.5053.2
		6	92.257.6003.2	92.257.6073.2	92.257.6053.2
		7	92.257.7003.2	92.257.7073.2	92.257.7053.2
		8	92.257.8003.2	92.257.8073.2	92.257.8053.2
Cable color:			■ black	■ black	■ black
Color of coding:	■ pastel blue	1	92.257.1003.9	92.257.1073.9	92.257.1053.9
Application:	mains 250 V + not SELV	2	92.257.2003.9	92.257.2073.9	92.257.2053.9
		3	92.257.3003.9	92.257.3073.9	92.257.3053.9
Marking of poles:	L, N, PE, D2, D1	4	92.257.4003.9	92.257.4073.9	92.257.4053.9
		5	92.257.5003.9	92.257.5073.9	92.257.5053.9
		6	92.257.6003.9	92.257.6073.9	92.257.6053.9
		7	92.257.7003.9	92.257.7073.9	92.257.7053.9
		8	92.257.8003.9	92.257.8073.9	92.257.8053.9
Cable color:			■ black	■ black	■ black
Color of coding:	■ tomato red	1	92.257.1003.0	92.257.1073.0	92.257.1053.0
Application:	UPS 250/400 V	2	92.257.2003.0	92.257.2073.0	92.257.2053.0
Marking of poles:	3, N, PE, 2, 1	3	92.257.3003.0	92.257.3073.0	92.257.3053.0
		4	92.257.4003.0	92.257.4073.0	92.257.4053.0
		5	92.257.5003.0	92.257.5073.0	92.257.5053.0
		6	92.257.6003.0	92.257.6073.0	92.257.6053.0
		7	92.257.7003.0	92.257.7073.0	92.257.7053.0
		8	92.257.8003.0	92.257.8073.0	92.257.8053.0
Cable color:			■ black	■ black	■ black
Color of coding:	■ may green	1	92.257.1003.7	92.257.1073.7	92.257.1053.7
Application:	customized (with PE)	2	92.257.2003.7	92.257.2073.7	92.257.2053.7
		3	92.257.3003.7	92.257.3073.7	92.257.3053.7
Marking of poles:	1, 2, PE, 3/N, 4	4	92.257.4003.7	92.257.4073.7	92.257.4053.7
		5	92.257.5003.7	92.257.5073.7	92.257.5053.7
		6	92.257.6003.7	92.257.6073.7	92.257.6053.7
		7	92.257.7003.7	92.257.7073.7	92.257.7053.7
		8	92.257.8003.7	92.257.8073.7	92.257.8053.7
Cable color:				■ black	■ black
Color of coding:	■ turquoise blue	1		92.257.1073.8*	92.257.1053.8*
Application:	customized (without PE)	2		92.257.2073.8*	92.257.2053.8*
		3		92.257.3073.8*	92.257.3053.8*
Marking of poles:	1, 2, 3, 4/N, 5	4		92.257.4073.8*	92.257.4053.8*
		5		92.257.5073.8*	92.257.5053.8*
		6		92.257.6073.8*	92.257.6053.8*
		7		92.257.7073.8*	92.257.7053.8*
		8		92.257.8073.8*	92.257.8053.8*

*) Alternative technical data, see facts & data.

GST18I5, CABLE ASSEMBLY, 5-POLE

1.5 mm², 16 A

TECHNICAL DATA

Rated voltage:	250 V / 400 V	Lockable:	self-locking (unlocking by tool)
Rated current:	16 A		
Degree of protection (IP):	IP20	Preparation of conductor ends:	ultrasonically compressed wire ends
		Additional technical data, see facts & data.	

connection cable, female - free end

		Length (m)	H05Z1Z1-F halogen free Eca Art.No.
Cable color:			■ black
Color of coding:	■ black	1	92.257.1063.1
Application:	mains 250/400 V	2	92.257.2063.1
Marking of poles:	3, N, PE, 2, 1	3	92.257.3063.1
		4	92.257.4063.1
		5	92.257.5063.1
		6	92.257.6063.1
		7	92.257.7063.1
		8	92.257.8063.1
Cable color:			□ white
Color of coding:	□ white	1	92.257.1063.2
Application:	mains 250/400 V	2	92.257.2063.2
Marking of poles:	3, N, PE, 2, 1	3	92.257.3063.2
		4	92.257.4063.2
		5	92.257.5063.2
		6	92.257.6063.2
		7	92.257.7063.2
		8	92.257.8063.2
Cable color:			■ black
Color of coding:	■ pastel blue	1	92.257.1063.9
Application:	mains 250 V + not SELV	2	92.257.2063.9
		3	92.257.3063.9
Marking of poles:	L, N, PE, D2, D1	4	92.257.4063.9
		5	92.257.5063.9
		6	92.257.6063.9
		7	92.257.7063.9
		8	92.257.8063.9
Cable color:			■ black
Color of coding:	■ tomato red	1	92.257.1063.0
Application:	UPS 250/400 V	2	92.257.2063.0
Marking of poles:	3, N, PE, 2, 1	3	92.257.3063.0
		4	92.257.4063.0
		5	92.257.5063.0
		6	92.257.6063.0
		7	92.257.7063.0
		8	92.257.8063.0
Cable color:			■ black
Color of coding:	■ may green	1	92.257.1063.7
Application:	customized (with PE)	2	92.257.2063.7
		3	92.257.3063.7
Marking of poles:	1, 2, PE, 3/N, 4	4	92.257.4063.7
		5	92.257.5063.7
		6	92.257.6063.7
		7	92.257.7063.7
		8	92.257.8063.7
Cable color:			■ black
Color of coding:	■ turquoise blue	1	92.257.1063.8*
Application:	customized (without PE)	2	92.257.2063.8*
		3	92.257.3063.8*
Marking of poles:	1, 2, 3, 4/N, 5	4	92.257.4063.8*
		5	92.257.5063.8*
		6	92.257.6063.8*
		7	92.257.7063.8*
		8	92.257.8063.8*

*) Alternative technical data, see facts & data.

Technical changes reserved

GST18I5, CABLE ASSEMBLY, 5-POLE

1.5 mm², 16 A

TECHNICAL DATA

Rated voltage:	250 V / 400 V	Lockable:	self-locking (unlocking by tool)
Rated current:	16 A		
Degree of protection (IP):	IP20	Preparation of conductor ends:	ultrasonically compressed wire ends

Additional technical data, see facts & data.

connection cable, male - free end

		Length (m)	H05VV-F halogenated Eca Art.No.	H05V2V2-F halogenated Eca Art.No.	H05Z1Z1-F halogen free B2ca s1 d1 a1 Art.No.
Cable color:			■ black	■ black	■ black
Color of coding:	■ black	1	92.257.1004.1		92.257.1074.1
Application:	mains 250/400 V	2	92.257.2004.1	92.257.2014.1	92.257.2074.1
Marking of poles:	3, N, PE, 2, 1	3	92.257.3004.1	92.257.3014.1	92.257.3074.1
		4	92.257.4004.1	92.257.4014.1	92.257.4074.1
		5	92.257.5004.1	92.257.5014.1	92.257.5074.1
		6	92.257.6004.1		92.257.6074.1
		7	92.257.7004.1		
		8	92.257.8004.1		92.257.8074.1
Cable color:			□ white		□ white
Color of coding:	□ white	1	92.257.1004.2		92.257.1074.2
Application:	mains 250/400 V	2	92.257.2004.2		92.257.2074.2
Marking of poles:	3, N, PE, 2, 1	3	92.257.3004.2		92.257.3074.2
		4	92.257.4004.2		92.257.4074.2
		5	92.257.5004.2		92.257.5074.2
		6	92.257.6004.2		92.257.6074.2
		7	92.257.7004.2		92.257.7074.2
		8	92.257.8004.2		92.257.8074.2
Cable color:			■ black		■ black
Color of coding:	■ pastel blue	1	92.257.1004.9		92.257.1074.9
Application:	mains 250 V + not SELV	2	92.257.2004.9		92.257.2074.9
		3	92.257.3004.9		92.257.3074.9
Marking of poles:	L, N, PE, D2, D1	4	92.257.4004.9		92.257.4074.9
		5	92.257.5004.9		92.257.5074.9
		6	92.257.6004.9		92.257.6074.9
		7	92.257.7004.9		92.257.7074.9
		8	92.257.8004.9		92.257.8074.9
Cable color:			■ black		■ black
Color of coding:	■ tomato red	1	92.257.1004.0		92.257.1074.0
Application:	UPS 250/400 V	2	92.257.2004.0		92.257.2074.0
Marking of poles:	3, N, PE, 2, 1	3	92.257.3004.0		92.257.3074.0
		4	92.257.4004.0		92.257.4074.0
		5	92.257.5004.0		92.257.5074.0
		6	92.257.6004.0		92.257.6074.0
		7	92.257.7004.0		92.257.7074.0
		8	92.257.8004.0		92.257.8074.0
Cable color:			■ black		■ black
Color of coding:	■ may green	1	92.257.1004.7		92.257.1074.7
Application:	customized (with PE)	2	92.257.2004.7		92.257.2074.7
		3	92.257.3004.7		92.257.3074.7
Marking of poles:	1, 2, PE, 3/N, 4	4	92.257.4004.7		92.257.4074.7
		5	92.257.5004.7		92.257.5074.7
		6	92.257.6004.7		92.257.6074.7
		7	92.257.7004.7		92.257.7074.7
		8	92.257.8004.7		92.257.8074.7
Cable color:					■ black
Color of coding:	■ turquoise blue	1			92.257.1074.8*
Application:	customized (without PE)	2			92.257.2074.8*
		3			92.257.3074.8*
Marking of poles:	1, 2, 3, 4/N, 5	4			92.257.4074.8*
		5			92.257.5074.8*
		6			92.257.6074.8*
		7			92.257.7074.8*
		8			92.257.8074.8*

*) Alternative technical data, see facts & data.

GST18I5, CABLE ASSEMBLY, 5-POLE

1.5 mm², 16 A

TECHNICAL DATA

Rated voltage:	250 V / 400 V	Lockable:	self-locking (unlocking by tool)
Rated current:	16 A		
Degree of protection (IP):	IP20	Preparation of conductor ends:	ultrasonically compressed wire ends

Additional technical data, see facts & data.

connection cable, male - free end

		Length (m)	H05Z1Z1-F halogen free Cca s1 d1 a1 Art.No.	H05Z1Z1-F halogen free Eca Art.No.
Cable color:			■ black	■ black
Color of coding:	■ black	1	92.257.1054.1	92.257.1064.1
Application:	mains 250/400 V	2	92.257.2054.1	92.257.2064.1
Marking of poles:	3, N, PE, 2, 1	3	92.257.3054.1	92.257.3064.1
		4	92.257.4054.1	92.257.4064.1
		5	92.257.5054.1	92.257.5064.1
		6	92.257.6054.1	92.257.6064.1
		7		
		8	92.257.8054.1	92.257.8064.1
Cable color:			□ white	□ white
Color of coding:	□ white	1	92.257.1054.2	92.257.1064.2
Application:	mains 250/400 V	2	92.257.2054.2	92.257.2064.2
Marking of poles:	3, N, PE, 2, 1	3	92.257.3054.2	92.257.3064.2
		4	92.257.4054.2	92.257.4064.2
		5	92.257.5054.2	92.257.5064.2
		6	92.257.6054.2	92.257.6064.2
		7	92.257.7054.2	92.257.7064.2
		8	92.257.8054.2	92.257.8064.2
Cable color:			■ black	■ black
Color of coding:	■ pastel blue	1	92.257.1054.9	92.257.1064.9
Application:	mains 250 V + not SELV	2	92.257.2054.9	92.257.2064.9
		3	92.257.3054.9	92.257.3064.9
Marking of poles:	L, N, PE, D2, D1	4	92.257.4054.9	92.257.4064.9
		5	92.257.5054.9	92.257.5064.9
		6	92.257.6054.9	92.257.6064.9
		7	92.257.7054.9	92.257.7064.9
		8	92.257.8054.9	92.257.8064.9
Cable color:			■ black	■ black
Color of coding:	■ tomato red	1	92.257.1054.0	92.257.1064.0
Application:	UPS 250/400 V	2	92.257.2054.0	92.257.2064.0
Marking of poles:	3, N, PE, 2, 1	3	92.257.3054.0	92.257.3064.0
		4	92.257.4054.0	92.257.4064.0
		5	92.257.5054.0	92.257.5064.0
		6	92.257.6054.0	92.257.6064.0
		7	92.257.7054.0	92.257.7064.0
		8	92.257.8054.0	92.257.8064.0
Cable color:			■ black	■ black
Color of coding:	■ may green	1	92.257.1054.7	92.257.1064.7
Application:	customized (with PE)	2	92.257.2054.7	92.257.2064.7
		3	92.257.3054.7	92.257.3064.7
Marking of poles:	1, 2, PE, 3/N, 4	4	92.257.4054.7	92.257.4064.7
		5	92.257.5054.7	92.257.5064.7
		6	92.257.6054.7	92.257.6064.7
		7	92.257.7054.7	92.257.7064.7
		8	92.257.8054.7	92.257.8064.7
Cable color:			■ black	■ black
Color of coding:	■ turquoise blue	1	92.257.1054.8*	92.257.1064.8*
Application:	customized (without PE)	2	92.257.2054.8*	92.257.2064.8*
		3	92.257.3054.8*	92.257.3064.8*
Marking of poles:	1, 2, 3, 4/N, 5	4	92.257.4054.8*	92.257.4064.8*
		5	92.257.5054.8*	92.257.5064.8*
		6	92.257.6054.8*	92.257.6064.8*
		7	92.257.7054.8*	92.257.7064.8*
		8	92.257.8054.8*	92.257.8064.8*

*) Alternative technical data, see facts & data.

Technical changes reserved

GST18I5, CABLE ASSEMBLY, 5-POLE

2.5 mm², 20 A

TECHNICAL DATA

Rated voltage:	250 V / 400 V	Lockable:	self-locking (unlocking by tool)
Rated current:	20 A		
Degree of protection (IP):	IP20	Additional technical data, see facts & data.	

connecting cable, female - male with test tap

		Length (m)	H05Z1Z1-F halogen free Eca Art.No.
Cable color:			■ black
Color of coding:	■ pastel blue	1	92.358.1060.9
Application:	mains 250 V + not SELV	2	92.358.2060.9
		3	92.358.3060.9
Marking of poles:	L, N, PE, D2, D1	4	92.358.4060.9
		5	92.358.5060.9
		6	92.358.6060.9

TECHNICAL DATA

Rated voltage:	250 V / 400 V	Lockable:	self-locking (unlocking by tool)
Rated current:	20 A		
Degree of protection (IP):	IP20	Preparation of conductor ends:	ultrasonically compressed wire ends
		Additional technical data, see facts & data.	

connection cable, male - free end with test tap

		Length (m)	H05Z1Z1-F halogen free Eca Art.No.
Cable color:			■ black
Color of coding:	■ pastel blue	1	92.358.1064.9
Application:	mains 250 V + not SELV	2	92.358.2064.9
		3	92.358.3064.9
Marking of poles:	L, N, PE, D2, D1	4	92.358.4064.9

GST18I5, CABLE ASSEMBLY, 5-POLE

2.5 mm², 20 A

TECHNICAL DATA

Rated voltage:	250 V / 400 V	Lockable:	self-locking (unlocking by tool)
Rated current:	20 A		
Degree of protection (IP):	IP20	Additional technical data, see facts & data.	

connecting cable, female - male

		Length (m)	H05VV-F halogenated Eca Art.No.	H05Z1Z1-F halogen free B2ca s1 d1 a1 Art.No.	H05Z1Z1-F halogen free Cca s1 d1 a1 Art.No.
Cable color:			■ black	■ black	■ black
Color of coding:	■ black	1	92.258.1000.1	92.258.1070.1	92.258.1050.1
Application:	mains 250/400 V	2	92.258.2000.1	92.258.2070.1	92.258.2050.1
Marking of poles:	3, N, PE, 2, 1	3	92.258.3000.1	92.258.3070.1	92.258.3050.1
		4	92.258.4000.1	92.258.4070.1	92.258.4050.1
		5	92.258.5000.1	92.258.5070.1	92.258.5050.1
		6	92.258.6000.1	92.258.6070.1	92.258.6050.1
		7	92.258.7000.1	92.258.7070.1	92.258.7050.1
		8	92.258.8000.1	92.258.8070.1	92.258.8050.1
Cable color:			□ white	□ white	□ white
Color of coding:	□ white	1	92.258.1000.2	92.258.1070.2	92.258.1050.2
Application:	mains 250/400 V	2	92.258.2000.2	92.258.2070.2	92.258.2050.2
Marking of poles:	3, N, PE, 2, 1	3	92.258.3000.2	92.258.3070.2	92.258.3050.2
		4	92.258.4000.2	92.258.4070.2	92.258.4050.2
		5	92.258.5000.2	92.258.5070.2	92.258.5050.2
		6	92.258.6000.2	92.258.6070.2	92.258.6050.2
		7	92.258.7000.2	92.258.7070.2	92.258.7050.2
		8	92.258.8000.2	92.258.8070.2	92.258.8050.2
Cable color:			■ black	■ black	■ black
Color of coding:	■ pastel blue	1	92.258.1000.9	92.258.1070.9	92.258.1050.9
Application:	mains 250 V + not SELV	2	92.258.2000.9	92.258.2070.9	92.258.2050.9
		3	92.258.3000.9	92.258.3070.9	92.258.3050.9
Marking of poles:	L, N, PE, D2, D1	4	92.258.4000.9	92.258.4070.9	92.258.4050.9
		5	92.258.5000.9	92.258.5070.9	92.258.5050.9
		6	92.258.6000.9	92.258.6070.9	92.258.6050.9
		7	92.258.7000.9	92.258.7070.9	92.258.7050.9
		8	92.258.8000.9	92.258.8070.9	92.258.8050.9
Cable color:				■ black	■ black
Color of coding:	■ pebble grey	2		92.258.2070.3	92.258.2050.3
Application:	UPS 250/400 V	3		92.258.3070.3	92.258.3050.3
Marking of poles:	3, N, PE, 2, 1	4		92.258.4070.3	92.258.4050.3
		6		92.258.6070.3	92.258.6050.3
		8		92.258.8070.3	92.258.8050.3

Technical changes reserved

GST18I5, CABLE ASSEMBLY, 5-POLE

2.5 mm², 20 A

TECHNICAL DATA

Rated voltage:	250 V / 400 V	Lockable:	self-locking (unlocking by tool)
Rated current:	20 A		
Degree of protection (IP):	IP20	Additional technical data, see facts & data.	

connecting cable, female - male

		Length (m)	H05Z1Z1-F halogen free Eca Art.No.
Cable color:			■ black
Color of coding:	■ black	1	92.258.1060.1
Application:	mains 250/400 V	2	92.258.2060.1
Marking of poles:	3, N, PE, 2, 1	3	92.258.3060.1
		4	92.258.4060.1
		5	92.258.5060.1
		6	92.258.6060.1
		7	92.258.7060.1
		8	92.258.8060.1
Cable color:			□ white
Color of coding:	□ white	1	92.258.1060.2
Application:	mains 250/400 V	2	92.258.2060.2
Marking of poles:	3, N, PE, 2, 1	3	92.258.3060.2
		4	92.258.4060.2
		5	92.258.5060.2
		6	92.258.6060.2
		7	92.258.7060.2
		8	92.258.8060.2
Cable color:			■ black
Color of coding:	■ pastel blue	1	92.258.1060.9
Application:	mains 250 V + not SELV	2	92.258.2060.9
		3	92.258.3060.9
Marking of poles:	L, N, PE, D2, D1	4	92.258.4060.9
		5	92.258.5060.9
		6	92.258.6060.9
		7	92.258.7060.9
		8	92.258.8060.9
Cable color:			■ black
Color of coding:	■ pebble grey	2	92.258.2060.3
Application:	UPS 250/400 V	3	92.258.3060.3
Marking of poles:	3, N, PE, 2, 1	4	92.258.4060.3
		6	92.258.6060.3
		8	92.258.8060.3

GST18I5, CABLE ASSEMBLY, 5-POLE

2.5 mm², 20 A

TECHNICAL DATA

Rated voltage:	250 V / 400 V	Lockable:	self-locking (unlocking by tool)
Rated current:	20 A		
Degree of protection (IP):	IP20	Preparation of conductor ends:	ultrasonically compressed wire ends

Additional technical data, see facts & data.

connection cable, female - free end

		Length (m)	H05VV-F halogenated Eca Art.No.	H05Z1Z1-F halogen free B2ca s1 d1 a1 Art.No.	H05Z1Z1-F halogen free Cca s1 d1 a1 Art.No.
Cable color:			■ black	■ black	■ black
Color of coding:	■ black	1	92.258.1003.1	92.258.1073.1	92.258.1053.1
Application:	mains 250/400 V	2	92.258.2003.1	92.258.2073.1	92.258.2053.1
Marking of poles:	3, N, PE, 2, 1	3	92.258.3003.1	92.258.3073.1	92.258.3053.1
		4	92.258.4003.1	92.258.4073.1	92.258.4053.1
		5	92.258.5003.1	92.258.5073.1	92.258.5053.1
		6	92.258.6003.1	92.258.6073.1	92.258.6053.1
		7	92.258.7003.1	92.258.7073.1	92.258.7053.1
		8	92.258.8003.1	92.258.8073.1	92.258.8053.1
Cable color:			□ white	□ white	□ white
Color of coding:	□ white	1	92.258.1003.2	92.258.1073.2	92.258.1053.2
Application:	mains 250/400 V	2	92.258.2003.2	92.258.2073.2	92.258.2053.2
Marking of poles:	3, N, PE, 2, 1	3	92.258.3003.2	92.258.3073.2	92.258.3053.2
		4	92.258.4003.2	92.258.4073.2	92.258.4053.2
		5	92.258.5003.2	92.258.5073.2	92.258.5053.2
		6	92.258.6003.2	92.258.6073.2	92.258.6053.2
		7	92.258.7003.2	92.258.7073.2	92.258.7053.2
		8	92.258.8003.2	92.258.8073.2	92.258.8053.2
Cable color:			■ black	■ black	■ black
Color of coding:	■ pastel blue	1	92.258.1003.9	92.258.1073.9	92.258.1053.9
Application:	mains 250 V + not SELV	2	92.258.2003.9	92.258.2073.9	92.258.2053.9
		3	92.258.3003.9	92.258.3073.9	92.258.3053.9
Marking of poles:	L, N, PE, D2, D1	4	92.258.4003.9	92.258.4073.9	92.258.4053.9
		5	92.258.5003.9	92.258.5073.9	92.258.5053.9
		6	92.258.6003.9	92.258.6073.9	92.258.6053.9
		7	92.258.7003.9	92.258.7073.9	92.258.7053.9
		8	92.258.8003.9	92.258.8073.9	92.258.8053.9

connection cable, female - free end

		Length (m)	H05Z1Z1-F halogen free Eca Art.No.
Cable color:			■ black
Color of coding:	■ black	1	92.258.1063.1
Application:	mains 250/400 V	2	92.258.2063.1
Marking of poles:	3, N, PE, 2, 1	3	92.258.3063.1
		4	92.258.4063.1
		5	92.258.5063.1
		6	92.258.6063.1
		7	92.258.7063.1
		8	92.258.8063.1
Cable color:			□ white
Color of coding:	□ white	1	92.258.1063.2
Application:	mains 250/400 V	2	92.258.2063.2
Marking of poles:	3, N, PE, 2, 1	3	92.258.3063.2
		4	92.258.4063.2
		5	92.258.5063.2
		6	92.258.6063.2
		7	92.258.7063.2
		8	92.258.8063.2
Cable color:			■ black
Color of coding:	■ pastel blue	1	92.258.1063.9
Application:	mains 250 V + not SELV	2	92.258.2063.9
		3	92.258.3063.9
Marking of poles:	L, N, PE, D2, D1	4	92.258.4063.9
		5	92.258.5063.9
		6	92.258.6063.9
		7	92.258.7063.9
		8	92.258.8063.9

Technical changes reserved

GST18I5, CABLE ASSEMBLY, 5-POLE

2.5 mm², 20 A

TECHNICAL DATA

Rated voltage:	250 V / 400 V	Lockable:	self-locking (unlocking by tool)
Rated current:	20 A		
Degree of protection (IP):	IP20	Preparation of conductor ends:	ultrasonically compressed wire ends

Additional technical data, see facts & data.

connection cable, male - free end

		Length (m)	H05VV-F halogenated Eca Art.No.	H05Z1Z1-F halogen free B2ca s1 d1 a1 Art.No.	H05Z1Z1-F halogen free Cca s1 d1 a1 Art.No.
Cable color:			■ black	■ black	■ black
Color of coding:	■ black	1	92.258.1004.1	92.258.1074.1	92.258.1054.1
Application:	mains 250/400 V	2	92.258.2004.1	92.258.2074.1	92.258.2054.1
Marking of poles:	3, N, PE, 2, 1	3	92.258.3004.1	92.258.3074.1	92.258.3054.1
		4	92.258.4004.1	92.258.4074.1	92.258.4054.1
		5	92.258.5004.1	92.258.5074.1	92.258.5054.1
		6	92.258.6004.1	92.258.6074.1	92.258.6054.1
		7	92.258.7004.1	92.258.7074.1	92.258.7054.1
		8	92.258.8004.1	92.258.8074.1	92.258.8054.1
Cable color:			□ white	□ white	□ white
Color of coding:	□ white	1	92.258.1004.2	92.258.1074.2	92.258.1054.2
Application:	mains 250/400 V	2	92.258.2004.2	92.258.2074.2	92.258.2054.2
Marking of poles:	3, N, PE, 2, 1	3	92.258.3004.2	92.258.3074.2	92.258.3054.2
		4	92.258.4004.2	92.258.4074.2	92.258.4054.2
		5	92.258.5004.2	92.258.5074.2	92.258.5054.2
		6	92.258.6004.2	92.258.6074.2	92.258.6054.2
		7	92.258.7004.2	92.258.7074.2	92.258.7054.2
		8	92.258.8004.2	92.258.8074.2	92.258.8054.2
Cable color:			■ black	■ black	■ black
Color of coding:	■ pastel blue	1	92.258.1004.9	92.258.1074.9	92.258.1054.9
Application:	mains 250 V + not SELV	2	92.258.2004.9	92.258.2074.9	92.258.2054.9
		3	92.258.3004.9	92.258.3074.9	92.258.3054.9
Marking of poles:	L, N, PE, D2, D1	4	92.258.4004.9	92.258.4074.9	92.258.4054.9
		5	92.258.5004.9	92.258.5074.9	92.258.5054.9
		6	92.258.6004.9	92.258.6074.9	92.258.6054.9
		7	92.258.7004.9	92.258.7074.9	92.258.7054.9
		8	92.258.8004.9	92.258.8074.9	92.258.8054.9

connection cable, male - free end

		Length (m)	H05Z1Z1-F halogen free Eca Art.No.
Cable color:			■ black
Color of coding:	■ black	1	92.258.1064.1
Application:	mains 250/400 V	2	92.258.2064.1
Marking of poles:	3, N, PE, 2, 1	3	92.258.3064.1
		4	92.258.4064.1
		5	92.258.5064.1
		6	92.258.6064.1
		7	92.258.7064.1
		8	92.258.8064.1
Cable color:			□ white
Color of coding:	□ white	1	92.258.1064.2
Application:	mains 250/400 V	2	92.258.2064.2
Marking of poles:	3, N, PE, 2, 1	3	92.258.3064.2
		4	92.258.4064.2
		5	92.258.5064.2
		6	92.258.6064.2
		7	92.258.7064.2
		8	92.258.8064.2
Cable color:			■ black
Color of coding:	■ pastel blue	1	92.258.1064.9
Application:	mains 250 V + not SELV	2	92.258.2064.9
		3	92.258.3064.9
Marking of poles:	L, N, PE, D2, D1	4	92.258.4064.9
		5	92.258.5064.9
		6	92.258.6064.9
		7	92.258.7064.9
		8	92.258.8064.9

GST18I6, CONNECTOR, 6-POLE

SCREW CONNECTION

TECHNICAL DATA			
Rated voltage:	250 V	Cross section fine-stranded:	0,75 mm² - 4 mm²
Rated current:	20 A	Connection cross section solid:	0,75 mm² - 4 mm²
Degree of protection (IP):	IP20	Additional technical data, see facts & data.	
Terminations per pole:	1		
Lockable:	self-locking (unlocking by tool)		

male **female**

for cables Ø 10-12 mm

Color of coding	Application	Marking of poles	male Art.No.	female Art.No.
☐ no-flame white	no-flame acc. IEC 60335-1	3, 2, 1, N, PE, L	92.968.0157.0*	92.969.0157.0*
■ pastel blue/black	mains 250 V + dimming + emergency	3, 2, 1, N, PE, L	92.968.0158.1*	92.969.0158.1*

male **female**

for cables Ø 11-15.5 mm

Color of coding	Application	Marking of poles	male Art.No.	female Art.No.
■ pastel blue/black	mains 250 V + dimming + emergency	3, 2, 1, N, PE, L	92.968.0358.1	92.969.0358.1

*) Alternative technical data, see facts & data.

Technical changes reserved

GST18I6, DEVICE CONNECTOR, 6-POLE

SPRING CLAMP CONNECTION

TECHNICAL DATA

Rated voltage:	250 V	Cross section fine-stranded:	0,5 mm² - 1,5 mm²
Rated current:	20 A	Connection cross section solid:	0,5 mm² - 2,5 mm²
Degree of protection (IP):	IP20	Additional technical data, see facts & data.	
Terminations per pole:	2		
Lockable:	self-locking (unlocking by tool)		

female

male

snap-in, housing material thickness 0.5-2.5 mm			female	male
Color of coding	**Application**	**Marking of poles**	**Art.No.**	**Art.No.**
pastel blue/black	mains 250 V + dimming + emergency	3, 2, 1, N, PE, L	92.061.8658.1	92.062.8658.1

GST18I6, DISTRIBUTOR, 6-POLE

TECHNICAL DATA			
Rated voltage:	250 V	Lockable:	self-locking (unlocking by tool)
Rated current:	20 A		
Degree of protection (IP):	IP20	Additional technical data, see facts & data.	

T-distributor, without mounting option, cascadable

Color of coding	Application	Marking of poles	Art.No.
pastel blue/black	mains 250 V + dimming + emergency	3, 2, 1, N, PE, L	92.060.3053.1

Technical changes reserved

GST18I6, CABLE ASSEMBLY, 6-POLE

1.5 mm², 16 A

TECHNICAL DATA

Rated voltage:	250 V	Lockable:	self-locking (unlocking by tool)
Rated current:	16 A		
Degree of protection (IP):	IP20	Additional technical data, see facts & data.	

connecting cable, female - male

Cable color:
Color of coding: pastel blue/black
Application: mains 250 V + dimming + emergency
Marking of poles: 3, 2, 1, N, PE, L

Length (m)	H05Z1Z1-F halogen free Art.No.	S05HH-F halogen free Art.No.
	black	black
1	92.267.1060.1	99.411.0028.0*
2	92.267.2060.1	99.412.0028.0*
3	92.267.3060.1	99.413.0028.0*
4	92.267.4060.1	99.414.0028.0*
5	92.267.5060.1	99.415.0028.0*
6	92.267.6060.1	99.416.0028.0*
7	92.267.7060.1	99.417.0028.0*
8	92.267.8060.1	99.418.0028.0*

TECHNICAL DATA

Rated voltage:	250 V	Lockable:	self-locking (unlocking by tool)
Rated current:	16 A		
Degree of protection (IP):	IP20	Preparation of conductor ends:	ultrasonically compressed wire ends
		Additional technical data, see facts & data.	

connection cable, female - free end

Cable color:
Color of coding: pastel blue/black
Application: mains 250 V + dimming + emergency
Marking of poles: 3, 2, 1, N, PE, L

Length (m)	H05Z1Z1-F halogen free Art.No.	S05HH-F halogen free Art.No.
	black	black
1	92.267.1063.1	99.431.0028.0*
2	92.267.2063.1	99.432.0028.0*
3	92.267.3063.1	99.433.0028.0*
4	92.267.4063.1	99.434.0028.0*
5	92.267.5063.1	99.435.0028.0*
6	92.267.6063.1	99.436.0028.0*
7	92.267.7063.1	99.437.0028.0*
8	92.267.8063.1	99.438.0028.0*

*) Alternative technical data, see facts & data.

GST18I6, CABLE ASSEMBLY, 6-POLE

1.5 mm², 16 A

TECHNICAL DATA

Rated voltage:	250 V	Lockable:	self-locking (unlocking by tool)
Rated current:	16 A		
Degree of protection (IP):	IP20	Preparation of conductor ends:	ultrasonically compressed wire ends

Additional technical data, see facts & data.

connection cable, male - free end

Cable color:
Color of coding: pastel blue/black
Application: mains 250 V + dimming + emergency
Marking of poles: 3, 2, 1, N, PE, L

Length (m)	H05Z1Z1-F halogen free Art.No.	S05HH-F halogen free Art.No.
	black	black
1	92.267.1064.1	99.451.0028.0*
2	92.267.2064.1	99.452.0028.0*
3	92.267.3064.1	99.453.0028.0*
4	92.267.4064.1	99.454.0028.0*
5	92.267.5064.1	99.455.0028.0*
6	92.267.6064.1	99.456.0028.0*
7	92.267.7064.1	99.457.0028.0*
8	92.267.8064.1	99.458.0028.0*

*) Alternative technical data, see facts & data.

Technical changes reserved

GST18®, ACCESSORIES

mounting part, for flying leads GST18i3

Color	Art.No.
■ black	Z5.566.5750.0

mounting part, for distributor mounting option

Color	Art.No.
■ black	07.413.6853.1
□ white	07.413.6853.0

mounting part, cable locking

Color	Art.No.
■ black	06.560.0300.0

mounting part, mounting angle built-in component

Color	Art.No.
□ white	34.300.1122.1

mounting part, snap-in frame for flying leads GST18

Color	Art.No.
■ black	06.561.7853.0

cover cap, GST18i, for female connectors

Color	Art.No.
■ black	05.564.5353.0
□ white	05.564.5353.2

cover cap, GST18i3, for female connectors

Color	Art.No.
■ black	05.561.3653.1
□ white	05.561.3653.0

GST18®, ACCESSORIES

cover cap, GST18i3, for male connectors

Color	Art.No.
■ black	05.594.4253.0
□ white	05.594.4250.0

cover cap, GST18i3, for snap-in cut out

Color	Art.No.
■ black	07.425.8753.1
□ white	07.425.8753.0

cover cap, GST18i4, for female connectors

Color	Art.No.
■ black	05.566.9153.0

cover cap, GST18i4, for snap-in cut out

Color	Art.No.
□ white	07.425.8853.0

cover cap, GST18i5, for female connectors

Color	Art.No.
■ black	05.566.9253.0

cover cap, GST18i5, for male connectors

Color	Art.No.
■ black	05.583.1853.0

cover cap, GST18i5, for snap-in cut out

Color	Art.No.
□ white	07.425.8953.0

Technical changes reserved

GST18®, ACCESSORIES

interlock, for flying leads GST18i6 flat

Color	Art.No.
■ black	06.562.0753.1

interlock, as spare part for snap-in

Color	Art.No.
■ black	05.595.1453.0
□ white	05.595.1453.2

interlock, as spare part for distribution units

Color	Art.No.
■ black	05.588.5753.1
□ white	05.588.5753.0

interlock, for flying leads

Color	Art.No.
■ black	05.587.3156.1
□ white	05.587.3156.0

interlock, for flying leads GST18 with test wholes

Color	Art.No.
■ black	06.562.6153.1

interlock, for solder parts

Color	Art.No.
■ black	05.590.4556.1
□ white	05.590.4556.0

strain relief, for GST18i3

Color	Art.No.
■ black	99.005.8210.0
□ white	99.004.8210.0

GST18®, ACCESSORIES, 3-POLE

socket outlet strip, 2 sockets

Color	Application	Marking of poles	Art.No.
■ black	mains 250 V	L, N, PE	99.600.0028.0
□ white	mains 250 V	L, N, PE	99.612.0028.0

socket outlet strip, 3 sockets, with child protection

Color	Application	Marking of poles	Art.No.
■ black	mains 250 V	L, N, PE	99.652.0028.0
□ white	mains 250 V	L, N, PE	99.653.0028.0

socket outlet strip, 3 sockets

Color	Application	Marking of poles	Art.No.
■ black	mains 250 V	L, N, PE	99.601.0028.0
□ white	mains 250 V	L, N, PE	99.602.0028.0

serviceplug

Color	Application	Marking of poles	Art.No.
■ black	mains 250 V	L, N, PE	92.002.5153.1
■ black	mains 250/400 V	2, 1, PE, N	92.002.5253.1
■ Grey	UPS 250/400 V	2, 1, PE, N	92.002.5053.0
■ pastel blue	mains 250 V + not SELV	D1, D2, L, PE, N	92.002.5353.0

overvoltage protection, accustical fault indication

Color	Application	Marking of poles	Art.No.
■ black	250 V	L, N, PE	84.990.1243.0

overvoltage protection, optical fault indication

Color	Application	Marking of poles	Art.No.
■ black	250 V	L, N, PE	84.990.1242.0

distributor box GST18®, left empty for device connections, max. 7 poles per side, with fastening option to 07.413.6853.1/0

Color	Art.No.
■ Grey	99.508.0028.0

Technical changes reserved

GST18®, ACCESSORIES, 5-POLE

installation distributor, cable assembly CEE16A/6h to GST18I5

Color	Application	Marking of poles	Nominal cross section	Art.No.
■ black	mains 250/400 V	1, 2, 3, N, PE	2.5 mm²	99.410.0000.1

installation distributor, with mounting option, IN 20 kVA with RST50i5, OUT 2 x GST18i3 black, 12 x GST18i3 white, 1 x GST18i5 white, 2 x SchuKo®-socket outlet, incl. adapter cord RST50i5 female to CEE

Color	Application	Marking of poles	Art.No.
■ Grey	mains 250/400 V	1, 2, 3, N, PE	93.053.6009.0

installation distributor, with mounting option, IN 20 kVA with RST50i5, OUT 3 x GST18i3 black, 6 x GST18i3 white, 1 x GST18i5 black, 3 x GST18i5 white, 2 x SchuKo®-socket outlet, incl. adapter cord RST50i5 female to CEE

Color	Application	Marking of poles	Art.No.
■ Grey	mains 250/400 V	1, 2, 3, N, PE	93.053.6010.0

installation distributor, with mounting option, IN 40 kVA with 63 A CEKON, OUT 3 x GST18i3 black, 6 x GST18i3 white, 3 x GST18i5 white, 1 x SchuKo®-socket outlet, incl. connecting cable RST50 to connect a 20 kVA WIV

Color	Application	Marking of poles	Art.No.
■ Grey	mains 250/400 V	1, 2, 3, N, PE	93.053.7007.0

installation distributor, with mounting option, IN 40 kVA with 63 A CEKON, OUT 3 x GST18i3 black, 9 x GST18i3 white, 1 x GST18i5 white, 1 x SchuKo®-socket outlet, incl. connecting cable RST50 to connect a 20 kVA WIV

Color	Application	Marking of poles	Art.No.
■ Grey	mains 250/400 V	1, 2, 3, N, PE	93.053.7006.0

GESIS® MINI **QUICK** AND SAFE.

This installation plug connector system combines minimum dimensions with maximum flexibility. gesis® MINI is ideal as a space-saving electrical installation system as well as for connections inside equipment or as an equipment connector – in accordance with the requirements of the fixed installation, of course.

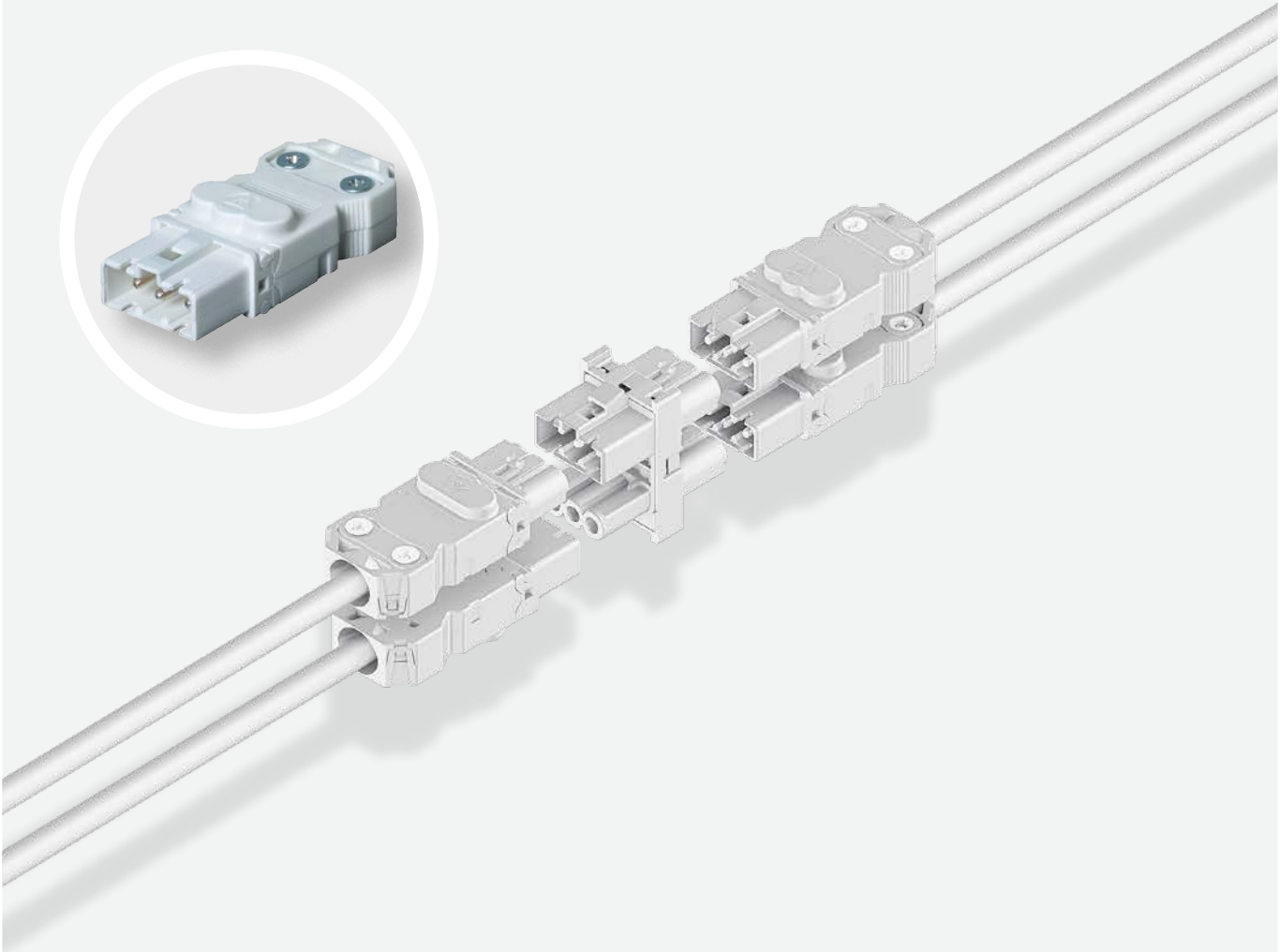

FEATURES

+ 2, 3, 4 and 5-pole | 16A rated current
+ Suitable for use as installation material in fixed installations.
+ Suitable as an equipment connector in accordance with the requirements of the fixed installation
+ Suitable as safe connection material inside electrical equipment

CODING OF **GST15 CONNECTORS**

GST15i2

Code 1	Code 2	Code 3	Code 5
L, N	D1, D2	1, 2	L, N
white			
black	**pastel blue**	**light blue**	**pebble gray**
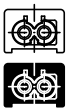			
Application	**Application**	**Application**	**Application**
Mains voltage protection class II	non-SELV (e.g. DALI)	Low voltage/SELV (50 V)	Mains voltage (e.g. UPS) Protective class II

GST15i3

Code 1	Code 4
L, N, PE	1, 2, 3
white	
black	**brown**
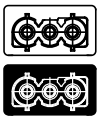	
Application	**Application**
Mains voltage	Switching application

GST15i4

Code 1	Code 6	Code 7
2, N, PE, 1	1, PE, 2/N, 3	1, 2/N, 3, 4
white		
black	**may green**	**turquoise blue**
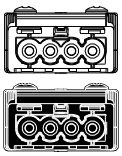		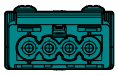
Application	**Application**	**Application**
Mains voltage	customized (with PE)	customized (without PE)

GST15i5

Code 1	Code 2	Code 3	Code 6	Code 7
3, 2, 1, PE, N	D1, D2, L, PE, N	1, 2, 3, 4, 5	1, 2, PE, 3, 4/N	1, 2, 3, 4, 5/N
white				
black	**pastel blue**	**light blue**	**may green**	**turquoise blue**
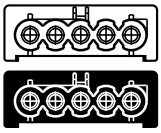				
Application	**Application**	**Application**	**Application**	**Application**
Mains voltage	Mains voltage 250 V + non-SELV (e.g. DALI)	Low voltage/SELV (50 V)	customized (with PE)	customized (without PE)

GST15I2, CONNECTOR, 2-POLE

SCREW CONNECTION

TECHNICAL DATA

Rated voltage:	250 V	Cross section fine-stranded:	0,5 mm² - 2,5 mm²
Rated current:	16 A	Connection cross section solid:	0,5 mm² - 2,5 mm²
Degree of protection (IP):	IP20	Additional technical data, see facts & data.	
Terminations per pole:	1		
Lockable:	self-locking (unlocking by tool)		

female

male

for cables Ø 3.4-5.5 mm

Color of coding	Application	Marking of poles	female Art.No.	male Art.No.
■ black	protection class II 250 V	L, N	91.921.2053.1	91.922.2053.1
□ white	protection class II 250 V	L, N	91.921.2053.0	91.922.2053.0
■ pastel blue	not SELV	D1, D2	91.921.2453.0*	91.922.2453.0*
■ light blue	SELV	1, 2	91.921.2353.0*	91.922.2353.0*

female

male

for cables Ø 6-7.7 mm

Color of coding	Application	Marking of poles	female Art.No.	male Art.No.
■ black	protection class II 250 V	L, N	91.921.3053.1	91.922.3053.1
□ white	protection class II 250 V	L, N	91.921.3053.0	91.922.3053.0
■ pastel blue	not SELV	D1, D2	91.921.3453.0*	91.922.3453.0*
■ light blue	SELV	1, 2	91.921.3353.0*	91.922.3353.0*
■ pebble grey	protection class II 250 V	L, N	91.921.3553.0	91.922.3553.0

*) Alternative technical data, see facts & data.

Technical changes reserved

GST15I2, DEVICE CONNECTOR, 2-POLE

SCREW CONNECTION

TECHNICAL DATA

Rated voltage:	250 V	Cross section fine-stranded:	0,5 mm² - 2,5 mm²
Rated current:	16 A	Connection cross section solid:	0,5 mm² - 2,5 mm²
Degree of protection (IP):	IP20	Additional technical data, see facts & data.	
Terminations per pole:	1		
Lockable:	self-locking (unlocking by tool)		

female **male**

snap-in, housing material thickness 0.5-1.5 mm

Color of coding	Application	Marking of poles	female Art.No.	male Art.No.
■ black	protection class II 250 V	L, N	91.921.9053.1	91.922.9053.1
□ white	protection class II 250 V	L, N	91.921.9053.0	91.922.9053.0
■ pastel blue	not SELV	D1, D2	91.921.9453.0*	91.922.9453.0*
■ light blue	SELV	1, 2	91.921.9353.0*	91.922.9353.0*
■ pebble grey	protection class II 250 V	L, N	91.921.9553.0	91.922.9553.0

SOLDERING CONNECTION

TECHNICAL DATA

Rated voltage:	250 V	Terminations per pole:	1
Rated current:	16 A	Lockable:	self-locking (unlocking by tool)
Degree of protection (IP):	IP20	Additional technical data, see facts & data.	

female **male**

solder connector, horizontal, with fastening flange

Color of coding	Application	Marking of poles	female Art.No.	male Art.No.
■ black	protection class II 250 V	L, N	91.023.0153.1	91.024.0153.1
□ white	protection class II 250 V	L, N	91.023.0153.0	91.024.0153.0
■ pastel blue	not SELV	D1, D2	91.023.0353.0*	91.024.0353.0*
■ light blue	SELV	1, 2	91.023.0553.0*	91.024.0553.0*
■ pebble grey	protection class II 250 V	L, N	91.023.1153.0	91.024.1153.0

female **male**

solder connector, horizontal, without fastening flange

Color of coding	Application	Marking of poles	female Art.No.	male Art.No.
■ black	protection class II 250 V	L, N	91.023.0053.1	91.024.0053.1
□ white	protection class II 250 V	L, N	91.023.0053.0	91.024.0053.0
■ pastel blue	not SELV	D1, D2	91.023.0253.0*	91.024.0253.0*
■ light blue	SELV	1, 2	91.023.0453.0*	91.024.0453.0*
■ pebble grey	protection class II 250 V	L, N	91.023.1053.0	91.024.1053.0

female **male**

solder connector, vertical, with fastening flange

Color of coding	Application	Marking of poles	female Art.No.	male Art.No.
■ black	protection class II 250 V	L, N	91.021.0153.1	91.022.0153.1
□ white	protection class II 250 V	L, N	91.021.0153.0	91.022.0153.0
■ pastel blue	not SELV	D1, D2	91.021.0353.0*	91.022.0353.0*
■ light blue	SELV	1, 2	91.021.0553.0*	91.022.0553.0*
■ pebble grey	protection class II 250 V	L, N	91.021.1153.0	91.022.1153.0

female **male**

solder connector, vertical, without fastening flange

Color of coding	Application	Marking of poles	female Art.No.	male Art.No.
■ black	protection class II 250 V	L, N	91.021.0053.1	91.022.0053.1
□ white	protection class II 250 V	L, N	91.021.0053.0	91.022.0053.0
■ pastel blue	not SELV	D1, D2	91.021.0253.0*	91.022.0253.0*
■ light blue	SELV	1, 2	91.021.0453.0*	91.022.0453.0*
■ pebble grey	protection class II 250 V	L, N	91.021.1053.0	91.022.1053.0

*) Alternative technical data, see facts & data.

GST15I2, DISTRIBUTOR, 2-POLE

TECHNICAL DATA			
Rated voltage:	250 V	Lockable:	self-locking (unlocking by tool)
Rated current:	16 A		
Degree of protection (IP):	IP20	Additional technical data, see facts & data.	

h-distributor, with fastening option to 07.418.9153.1

Color of coding	Application	Marking of poles	Art.No.
■ black	protection class II 250 V	L, N	91.020.7053.1
□ white	protection class II 250 V	L, N	91.020.7053.0
■ pastel blue	not SELV	D1, D2	91.020.7153.0*
■ light blue	SELV	1, 2	91.020.7253.0*
■ pebble grey	protection class II 250 V	L, N	91.020.7453.0

H-distributor, with fastening option to 07.418.9153.1

Color of coding	Application	Marking of poles	Art.No.
■ black	protection class II 250 V	L, N	91.020.4953.1
□ white	protection class II 250 V	L, N	91.020.4953.0
■ pastel blue	not SELV	D1, D2	91.020.5053.0*
■ light blue	SELV	1, 2	91.020.5153.0*
■ pebble grey	protection class II 250 V	L, N	91.020.5353.0

T-distributor, without mounting option, cascadable

Color of coding	Application	Marking of poles	Art.No.
■ black	protection class II 250 V	L, N	91.020.1053.1
□ white	protection class II 250 V	L, N	91.020.1053.0
■ pastel blue	not SELV	D1, D2	91.020.1253.0*
■ light blue	SELV	1, 2	91.020.1453.0*
■ pebble grey	protection class II 250 V	L, N	91.020.1853.0

intermediate coupling, not lockable, without fastening option

Color of coding	Application	Marking of poles	Art.No.
■ black	protection class II 250 V	L, N	91.020.5953.1
□ white	protection class II 250 V	L, N	91.020.5953.0
■ pastel blue	not SELV	D1, D2	91.020.6053.0*
■ light blue	SELV	1, 2	91.020.6153.0*
■ pebble grey	protection class II 250 V	L, N	91.020.6353.0

*) Alternative technical data, see facts & data.

Technical changes reserved

GST15I2, CABLE ASSEMBLY, 2-POLE

1.5 mm², 16 A

TECHNICAL DATA

Rated voltage:	250 V	Lockable:	self-locking (unlocking by tool)
Rated current:	16 A		
Degree of protection (IP):	IP20	Additional technical data, see facts & data.	

connecting cable, female - male

		Length (m)	H05VV-F halogenated Eca Art.No.	H05Z1Z1-F halogen free B2ca s1 d1 a1 Art.No.	H05Z1Z1-F halogen free Cca s1 d1 a1 Art.No.
Cable color:			■ black	■ black	■ black
Color of coding:	■ black	1	91.222.1000.1	91.222.1070.1	91.222.1050.1
Application:	protection class II 250 V	2	91.222.2000.1	91.222.2070.1	91.222.2050.1
		3	91.222.3000.1	91.222.3070.1	91.222.3050.1
Marking of poles:	L, N	4	91.222.4000.1	91.222.4070.1	91.222.4050.1
		5	91.222.5000.1	91.222.5070.1	91.222.5050.1
		6	91.222.6000.1	91.222.6070.1	91.222.6050.1
		7	91.222.7000.1	91.222.7070.1	91.222.7050.1
		8	91.222.8000.1	91.222.8070.1	91.222.8050.1
Cable color:			□ white	□ white	□ white
Color of coding:	□ white	1	91.222.1000.2	91.222.1070.2	91.222.1050.2
Application:	protection class II 250 V	2	91.222.2000.2	91.222.2070.2	91.222.2050.2
		3	91.222.3000.2	91.222.3070.2	91.222.3050.2
Marking of poles:	L, N	4	91.222.4000.2	91.222.4070.2	91.222.4050.2
		5	91.222.5000.2	91.222.5070.2	91.222.5050.2
		6	91.222.6000.2	91.222.6070.2	91.222.6050.2
		7	91.222.7000.2	91.222.7070.2	91.222.7050.2
		8	91.222.8000.2	91.222.8070.2	91.222.8050.2
Cable color:			□ white	□ white	□ white
Color of coding:	■ pastel blue	1	91.222.1000.9*	91.222.1070.9*	91.222.1050.9*
Application:	not SELV	2	91.222.2000.9*	91.222.2070.9*	91.222.2050.9*
Marking of poles:	D1, D2	3	91.222.3000.9*	91.222.3070.9*	91.222.3050.9*
		4	91.222.4000.9*	91.222.4070.9*	91.222.4050.9*
		5	91.222.5000.9*	91.222.5070.9*	91.222.5050.9*
		6	91.222.6000.9*	91.222.6070.9*	91.222.6050.9*
		7	91.222.7000.9*	91.222.7070.9*	91.222.7050.9*
		8	91.222.8000.9*	91.222.8070.9*	91.222.8050.9*
Cable color:			□ white	□ white	□ white
Color of coding:	■ light blue	1	91.222.1000.6*	91.222.1070.6*	91.222.1050.6*
Application:	SELV	2	91.222.2000.6*	91.222.2070.6*	91.222.2050.6*
Marking of poles:	1, 2	3	91.222.3000.6*	91.222.3070.6*	91.222.3050.6*
		4	91.222.4000.6*	91.222.4070.6*	91.222.4050.6*
		5	91.222.5000.6*	91.222.5070.6*	91.222.5050.6*
		6	91.222.6000.6*	91.222.6070.6*	91.222.6050.6*
		7	91.222.7000.6*	91.222.7070.6*	91.222.7050.6*
		8	91.222.8000.6*	91.222.8070.6*	91.222.8050.6*

*) Alternative technical data, see facts & data.

GST15I2, CABLE ASSEMBLY, 2-POLE

1.5 mm², 16 A

TECHNICAL DATA

Rated voltage:	250 V	Lockable:	self-locking (unlocking by tool)
Rated current:	16 A		
Degree of protection (IP):	IP20	Additional technical data, see facts & data.	

connecting cable, female - male

		Length (m)	H05Z1Z1-F halogen free Eca Art.No.
Cable color:			■ black
Color of coding:	■ black	1	91.222.1060.1
Application:	protection class II 250 V	2	91.222.2060.1
		3	91.222.3060.1
Marking of poles:	L, N	4	91.222.4060.1
		5	91.222.5060.1
		6	91.222.6060.1
		7	91.222.7060.1
		8	91.222.8060.1
Cable color:			□ white
Color of coding:	□ white	1	91.222.1060.2
Application:	protection class II 250 V	2	91.222.2060.2
		3	91.222.3060.2
Marking of poles:	L, N	4	91.222.4060.2
		5	91.222.5060.2
		6	91.222.6060.2
		7	91.222.7060.2
		8	91.222.8060.2
Cable color:			□ white
Color of coding:	■ pastel blue	1	91.222.1060.9*
Application:	not SELV	2	91.222.2060.9*
Marking of poles:	D1, D2	3	91.222.3060.9*
		4	91.222.4060.9*
		5	91.222.5060.9*
		6	91.222.6060.9*
		7	91.222.7060.9*
		8	91.222.8060.9*
Cable color:			
Color of coding:	■ light blue	1	
Application:	SELV	2	
Marking of poles:	1, 2	3	
		4	
		5	
		6	
		7	
		8	

*) Alternative technical data, see facts & data.

Technical changes reserved

GST15I2, CABLE ASSEMBLY, 2-POLE

1.5 mm², 16 A

TECHNICAL DATA

Rated voltage:	250 V	Lockable:	self-locking (unlocking by tool)
Rated current:	16 A		
Degree of protection (IP):	IP20	Preparation of conductor ends:	ultrasonically compressed wire ends

Additional technical data, see facts & data.

connection cable, female - free end

		Length (m)	H05VV-F halogenated Eca Art.No.	H05Z1Z1-F halogen free B2ca s1 d1 a1 Art.No.	H05Z1Z1-F halogen free Cca s1 d1 a1 Art.No.
Cable color:			■ black	■ black	■ black
Color of coding:	■ black	1	91.222.1003.1	91.222.1073.1	91.222.1053.1
Application:	protection class II 250 V	2	91.222.2003.1	91.222.2073.1	91.222.2053.1
		3	91.222.3003.1	91.222.3073.1	91.222.3053.1
Marking of poles:	L, N	4	91.222.4003.1	91.222.4073.1	91.222.4053.1
		5	91.222.5003.1	91.222.5073.1	91.222.5053.1
		6	91.222.6003.1	91.222.6073.1	91.222.6053.1
		7	91.222.7003.1	91.222.7073.1	91.222.7053.1
		8	91.222.8003.1	91.222.8073.1	91.222.8053.1
Cable color:			☐ white	☐ white	☐ white
Color of coding:	☐ white	1	91.222.1003.2	91.222.1073.2	91.222.1053.2
Application:	protection class II 250 V	2	91.222.2003.2	91.222.2073.2	91.222.2053.2
		3	91.222.3003.2	91.222.3073.2	91.222.3053.2
Marking of poles:	L, N	4	91.222.4003.2	91.222.4073.2	91.222.4053.2
		5	91.222.5003.2	91.222.5073.2	91.222.5053.2
		6	91.222.6003.2	91.222.6073.2	91.222.6053.2
		7	91.222.7003.2	91.222.7073.2	91.222.7053.2
		8	91.222.8003.2	91.222.8073.2	91.222.8053.2
Cable color:			☐ white	☐ white	☐ white
Color of coding:	■ pastel blue	1	91.222.1003.9*	91.222.1073.9*	91.222.1053.9*
Application:	not SELV	2	91.222.2003.9*	91.222.2073.9*	91.222.2053.9*
Marking of poles:	D1, D2	3	91.222.3003.9*	91.222.3073.9*	91.222.3053.9*
		4	91.222.4003.9*	91.222.4073.9*	91.222.4053.9*
		5	91.222.5003.9*	91.222.5073.9*	91.222.5053.9*
		6	91.222.6003.9*	91.222.6073.9*	91.222.6053.9*
		7	91.222.7003.9*		
		8	91.222.8003.9*	91.222.8073.9*	91.222.8053.9*
Cable color:			☐ white	☐ white	☐ white
Color of coding:	■ light blue	1	91.222.1003.6*	91.222.1073.6*	91.222.1053.6*
Application:	SELV	2	91.222.2003.6*	91.222.2073.6*	91.222.2053.6*
Marking of poles:	1, 2	3	91.222.3003.6*	91.222.3073.6*	91.222.3053.6*
		4	91.222.4003.6*	91.222.4073.6*	91.222.4053.6*
		5	91.222.5003.6*	91.222.5073.6*	91.222.5053.6*
		6	91.222.6003.6*	91.222.6073.6*	91.222.6053.6*
		7	91.222.7003.6*	91.222.7073.6*	91.222.7053.6*
		8	91.222.8003.6*	91.222.8073.6*	91.222.8053.6*

*) Alternative technical data, see facts & data.

GST15I2, CABLE ASSEMBLY, 2-POLE

1.5 mm², 16 A

TECHNICAL DATA

Rated voltage:	250 V	Lockable:	self-locking (unlocking by tool)
Rated current:	16 A		
Degree of protection (IP):	IP20	Preparation of conductor ends:	ultrasonically compressed wire ends

Additional technical data, see facts & data.

connection cable, female - free end

		Length (m)	H05Z1Z1-F halogen free Eca Art.No.
Cable color:			■ black
Color of coding:	■ black	1	91.222.1063.1
Application:	protection class II 250 V	2	91.222.2063.1
		3	91.222.3063.1
Marking of poles:	L, N	4	91.222.4063.1
		5	
		6	
		7	
		8	
Cable color:			□ white
Color of coding:	□ white	1	91.222.1063.2
Application:	protection class II 250 V	2	91.222.2063.2
		3	91.222.3063.2
Marking of poles:	L, N	4	
		5	
		6	
		7	
		8	
Cable color:			□ white
Color of coding:	■ pastel blue	1	91.222.1063.9*
Application:	not SELV	2	91.222.2063.9*
Marking of poles:	D1, D2	3	91.222.3063.9*
		4	91.222.4063.9*
		5	91.222.5063.9*
		6	91.222.6063.9*
		7	91.222.7063.9*
		8	91.222.8063.9*
Cable color:			□ white
Color of coding:	■ light blue	1	91.222.1063.6*
Application:	SELV	2	
Marking of poles:	1, 2	3	
		4	
		5	
		6	
		7	
		8	

*) Alternative technical data, see facts & data.

Technical changes reserved

GST15I2, CABLE ASSEMBLY, 2-POLE

1.5 mm², 16 A

TECHNICAL DATA

Rated voltage:	250 V	Lockable:	self-locking (unlocking by tool)
Rated current:	16 A		
Degree of protection (IP):	IP20	Preparation of conductor ends:	ultrasonically compressed wire ends

Additional technical data, see facts & data.

connection cable, male - free end

		Length (m)	H05VV-F halogenated Eca Art.No.	H05Z1Z1-F halogen free B2ca s1 d1 a1 Art.No.	H05Z1Z1-F halogen free Cca s1 d1 a1 Art.No.
Cable color:			■ black	■ black	■ black
Color of coding:	■ black	1	91.222.1004.1	91.222.1074.1	91.222.1054.1
Application:	protection class II 250 V	2	91.222.2004.1	91.222.2074.1	91.222.2054.1
		3	91.222.3004.1	91.222.3074.1	91.222.3054.1
Marking of poles:	L, N	4	91.222.4004.1	91.222.4074.1	91.222.4054.1
		5	91.222.5004.1	91.222.5074.1	91.222.5054.1
		6	91.222.6004.1	91.222.6074.1	91.222.6054.1
		7	91.222.7004.1	91.222.7074.1	91.222.7054.1
		8	91.222.8004.1	91.222.8074.1	91.222.8054.1
Cable color:			□ white	□ white	□ white
Color of coding:	□ white	1	91.222.1004.2	91.222.1074.2	91.222.1054.2
Application:	protection class II 250 V	2	91.222.2004.2	91.222.2074.2	91.222.2054.2
		3	91.222.3004.2	91.222.3074.2	91.222.3054.2
Marking of poles:	L, N	4	91.222.4004.2	91.222.4074.2	91.222.4054.2
		5	91.222.5004.2	91.222.5074.2	91.222.5054.2
		6	91.222.6004.2	91.222.6074.2	91.222.6054.2
		7	91.222.7004.2	91.222.7074.2	91.222.7054.2
		8	91.222.8004.2	91.222.8074.2	91.222.8054.2
Cable color:			□ white	□ white	□ white
Color of coding:	■ pastel blue	1	91.222.1004.9*	91.222.1074.9*	91.222.1054.9*
Application:	not SELV	2	91.222.2004.9*	91.222.2074.9*	91.222.2054.9*
Marking of poles:	D1, D2	3	91.222.3004.9*	91.222.3074.9*	91.222.3054.9*
		4	91.222.4004.9*	91.222.4074.9*	91.222.4054.9*
		5	91.222.5004.9*	91.222.5074.9*	91.222.5054.9*
		6	91.222.6004.9*	91.222.6074.9*	91.222.6054.9*
		7	91.222.7004.9*	91.222.7074.9*	91.222.7054.9*
		8	91.222.8004.9*	91.222.8074.9*	91.222.8054.9*
Cable color:			□ white	□ white	□ white
Color of coding:	■ light blue	1	91.222.1004.6*	91.222.1074.6*	91.222.1054.6*
Application:	SELV	2	91.222.2004.6*	91.222.2074.6*	91.222.2054.6*
Marking of poles:	1, 2	3	91.222.3004.6*	91.222.3074.6*	91.222.3054.6*
		4	91.222.4004.6*	91.222.4074.6*	91.222.4054.6*
		5	91.222.5004.6*	91.222.5074.6*	91.222.5054.6*
		6	91.222.6004.6*	91.222.6074.6*	91.222.6054.6*
		7	91.222.7004.6*	91.222.7074.6*	91.222.7054.6*
		8	91.222.8004.6*	91.222.8074.6*	91.222.8054.6*

*) Alternative technical data, see facts & data.

GST15I2, CABLE ASSEMBLY, 2-POLE

1.5 mm², 16 A

TECHNICAL DATA

Rated voltage:	250 V	Lockable:	self-locking (unlocking by tool)
Rated current:	16 A		
Degree of protection (IP):	IP20	Preparation of conductor ends:	ultrasonically compressed wire ends

Additional technical data, see facts & data.

connection cable, male - free end

		Length (m)	H05Z1Z1-F halogen free Eca Art.No.
Cable color:			■ black
Color of coding:	■ black	1	91.222.1064.1
Application:	protection class II 250 V	2	91.222.2064.1
Marking of poles:	L, N	3	91.222.3064.1
		4	
		5	
		6	
		7	
		8	
Cable color:			□ white
Color of coding:	□ white	1	91.222.1064.2
Application:	protection class II 250 V	2	91.222.2064.2
Marking of poles:	L, N	3	91.222.3064.2
		4	
		5	91.222.5064.2
		6	
		7	
		8	
Cable color:			□ white
Color of coding:	■ pastel blue	1	91.222.1064.9*
Application:	not SELV	2	91.222.2064.9*
Marking of poles:	D1, D2	3	91.222.3064.9*
		4	91.222.4064.9*
		5	91.222.5064.9*
		6	91.222.6064.9*
		7	
		8	91.222.8064.9*
Cable color:			
Color of coding:	■ light blue	1	
Application:	SELV	2	
Marking of poles:	1, 2	3	
		4	
		5	
		6	
		7	
		8	

*) Alternative technical data, see facts & data.

Technical changes reserved

GST15I3, CONNECTOR, 3-POLE

SCREW CONNECTION

TECHNICAL DATA

Rated voltage:	250 V	Cross section fine-stranded:	0,5 mm² - 2,5 mm²
Rated current:	16 A	Connection cross section solid:	0,5 mm² - 2,5 mm²
Degree of protection (IP):	IP20	Additional technical data, see facts & data.	
Terminations per pole:	1		
Lockable:	self-locking (unlocking by tool)		

female **male**

for cables Ø 5.5-9 mm

Color of coding	Application	Marking of poles	female Art.No.	male Art.No.
■ black	mains 250 V	L, N, PE	91.931.3053.1	91.932.3053.1
□ white	mains 250 V	L, N, PE	91.931.3053.0	91.932.3053.0
■ brown	switch funktion 250 V	1, 2, 3	91.931.3853.0	91.932.3853.0
□ no-flame white	no-flame acc. IEC 60335-1	L, N, PE	91.931.3057.0	91.932.3057.0

female **male**

for cables Ø 5.6-11 mm

Color of coding	Application	Marking of poles	female Art.No.	male Art.No.
■ black	mains 250 V	L, N, PE	91.931.4053.1	91.932.4053.1
□ white	mains 250 V	L, N, PE	91.931.4053.0	91.932.4053.0

GST15I3, DEVICE CONNECTOR, 3-POLE

SCREW CONNECTION

TECHNICAL DATA

Rated voltage:	250 V	Cross section fine-stranded:	0,5 mm² - 2,5 mm²
Rated current:	16 A	Connection cross section solid:	0,5 mm² - 2,5 mm²
Degree of protection (IP):	IP20	Additional technical data, see facts & data.	
Terminations per pole:	1		
Lockable:	self-locking (unlocking by tool)		

female **male**

snap-in, housing material thickness 0.5-1.5 mm			female	male
Color of coding	**Application**	**Marking of poles**	**Art.No.**	**Art.No.**
■ black	mains 250 V	L, N, PE	91.931.9053.1	91.932.9053.1
□ white	mains 250 V	L, N, PE	91.931.9053.0	91.932.9053.0
■ brown	switch funktion 250 V	1, 2, 3	91.931.9853.0	91.932.9853.0
□ no-flame white	no-flame acc. IEC 60335-1	L, N, PE	91.931.9057.0	

female **male**

snap-in, Housing material thickness 0.5-1.5 mm, protruding, not pluggable with flush-mounted snap-ins			female	male
Color of coding	**Application**	**Marking of poles**	**Art.No.**	**Art.No.**
■ black	mains 250 V	L, N, PE	91.931.9153.1	91.932.9153.1
□ white	mains 250 V	L, N, PE	91.931.9153.0	91.932.9153.0

SOLDERING CONNECTION

TECHNICAL DATA

Rated voltage:	250 V	Terminations per pole:	1
Rated current:	16 A	Lockable:	self-locking (unlocking by tool)
Degree of protection (IP):	IP20	Additional technical data, see facts & data.	

female **male**

solder connector, horizontal, with fastening flange			female	male
Color of coding	**Application**	**Marking of poles**	**Art.No.**	**Art.No.**
■ black	mains 250 V	L, N, PE	91.033.0153.1	91.034.0153.1
□ white	mains 250 V	L, N, PE	91.033.0153.0	91.034.0153.0
■ brown	switch funktion 250 V	1, 2, 3	91.033.0753.0	91.034.0753.0

female **male**

solder connector, horizontal, without fastening flange			female	male
Color of coding	**Application**	**Marking of poles**	**Art.No.**	**Art.No.**
■ black	mains 250 V	L, N, PE	91.033.0053.1	91.034.0053.1
□ white	mains 250 V	L, N, PE	91.033.0053.0	91.034.0053.0
■ brown	switch funktion 250 V	1, 2, 3	91.033.0653.0	91.034.0653.0

female **male**

solder connector, vertical, with fastening flange			female	male
Color of coding	**Application**	**Marking of poles**	**Art.No.**	**Art.No.**
■ black	mains 250 V	L, N, PE	91.031.0153.1	91.032.0153.1
□ white	mains 250 V	L, N, PE	91.031.0153.0	91.032.0153.0
■ brown	switch funktion 250 V	1, 2, 3	91.031.0753.0	91.032.0753.0

Technical changes reserved

GST15I3, DEVICE CONNECTOR, 3-POLE

SOLDERING CONNECTION

TECHNICAL DATA

Rated voltage:	250 V	Terminations per pole:	1
Rated current:	16 A	Lockable:	self-locking (unlocking by tool)
Degree of protection (IP):	IP20		

Additional technical data, see facts & data.

female

male

solder connector, vertical, without fastening flange

Color of coding	Application	Marking of poles	female Art.No.	male Art.No.
■ black	mains 250 V	L, N, PE	91.031.0053.1	91.032.0053.1
□ white	mains 250 V	L, N, PE	91.031.0053.0	91.032.0053.0
■ brown	switch funktion 250 V	1, 2, 3	91.031.0653.0	91.032.0653.0

GST15I3, DISTRIBUTOR, 3-POLE

TECHNICAL DATA			
Rated voltage:	250 V	Lockable:	self-locking (unlocking by tool)
Rated current:	16 A		
Degree of protection (IP):	IP20	Additional technical data, see facts & data.	

h-distributor, with fastening option to 07.418.9153.1

Color of coding	Application	Marking of poles	Art.No.
■ black	mains 250 V	L, N, PE	91.030.6053.1
□ white	mains 250 V	L, N, PE	91.030.6053.0

H-distributor, with fastening option to 07.418.9153.1

Color of coding	Application	Marking of poles	Art.No.
■ black	mains 250 V	L, N, PE	91.030.4953.1
□ white	mains 250 V	L, N, PE	91.030.4953.0

HH-distributor, with fastening option to 07.418.9253.1

Color of coding	Application	Marking of poles	Art.No.
■ black	mains 250 V	L, N, PE	91.030.5253.1
□ white	mains 250 V	L, N, PE	91.030.5253.0

T-distributor, without mounting option, cascadable

Color of coding	Application	Marking of poles	Art.No.
■ black	mains 250 V	L, N, PE	91.030.1053.1
□ white	mains 250 V	L, N, PE	91.030.1053.0

U-connector, without fastening option

Color of coding	Application	Marking of poles	Art.No.
■ black	mains 250 V	L, N, PE	91.030.5853.1
□ white	mains 250 V	L, N, PE	91.030.5853.0

intermediate coupling, not lockable, without fastening option

Color of coding	Application	Marking of poles	Art.No.
■ black	mains 250 V	L, N, PE	91.030.5953.1
□ white	mains 250 V	L, N, PE	91.030.5953.0

Technical changes reserved

GST15I3, CABLE ASSEMBLY, 3-POLE

1.5 mm², 16 A

TECHNICAL DATA

Rated voltage:	250 V	Lockable:	self-locking (unlocking by tool)
Rated current:	16 A		
Degree of protection (IP):	IP20	Additional technical data, see facts & data.	

connecting cable, female - male

		Length (m)	H05VV-F halogenated Eca Art.No.	H05Z1Z1-F halogen free B2ca s1 d1 a1 Art.No.	H05Z1Z1-F halogen free Cca s1 d1 a1 Art.No.
Cable color:			■ black	■ black	■ black
Color of coding:	■ black	1	91.232.1000.1	91.232.1070.1	91.232.1050.1
Application:	mains 250 V	2	91.232.2000.1	91.232.2070.1	91.232.2050.1
Marking of poles:	L, N, PE	3	91.232.3000.1	91.232.3070.1	91.232.3050.1
		4	91.232.4000.1	91.232.4070.1	91.232.4050.1
		5	91.232.5000.1	91.232.5070.1	91.232.5050.1
		6	91.232.6000.1	91.232.6070.1	91.232.6050.1
		7	91.232.7000.1	91.232.7070.1	91.232.7050.1
		8	91.232.8000.1	91.232.8070.1	91.232.8050.1
Cable color:			□ white	□ white	□ white
Color of coding:	□ white	1	91.232.1000.2	91.232.1070.2	91.232.1050.2
Application:	mains 250 V	2	91.232.2000.2	91.232.2070.2	91.232.2050.2
Marking of poles:	L, N, PE	3	91.232.3000.2	91.232.3070.2	91.232.3050.2
		4	91.232.4000.2	91.232.4070.2	91.232.4050.2
		5	91.232.5000.2	91.232.5070.2	91.232.5050.2
		6	91.232.6000.2	91.232.6070.2	91.232.6050.2
		7	91.232.7000.2	91.232.7070.2	91.232.7050.2
		8	91.232.8000.2	91.232.8070.2	91.232.8050.2
Cable color:			■ black		
Color of coding:	■ brown	1	91.232.1000.4		
Application:	switch funktion 250 V	2	91.232.2000.4		
		3	91.232.3000.4		
Marking of poles:	1, 2, 3	4	91.232.4000.4		
		5	91.232.5000.4		
		6	91.232.6000.4		
		7	91.232.7000.4		
		8	91.232.8000.4		

connecting cable, female - male

		Length (m)	H05Z1Z1-F halogen free Eca Art.No.
Cable color:			■ black
Color of coding:	■ black	1	91.232.1060.1
Application:	mains 250 V	2	91.232.2060.1
Marking of poles:	L, N, PE	3	91.232.3060.1
		4	
		5	91.232.5060.1
		6	91.232.6060.1
		7	
		8	91.232.8060.1
Cable color:			□ white
Color of coding:	□ white	1	91.232.1060.2
Application:	mains 250 V	2	91.232.2060.2
Marking of poles:	L, N, PE	3	91.232.3060.2
		4	91.232.4060.2
		5	91.232.5060.2
		6	91.232.6060.2
		7	91.232.7060.2
		8	91.232.8060.2
Cable color:			
Color of coding:	■ brown	1	
Application:	switch funktion 250 V	2	
		3	
Marking of poles:	1, 2, 3	4	
		5	
		6	
		7	
		8	

GST15I3, CABLE ASSEMBLY, 3-POLE

1.5 mm², 16 A

TECHNICAL DATA

Rated voltage:	250 V	Lockable:	self-locking (unlocking by tool)
Rated current:	16 A		
Degree of protection (IP):	IP20	Preparation of conductor ends:	ultrasonically compressed wire ends

Additional technical data, see facts & data.

connection cable, female - free end

		Length (m)	H05VV-F halogenated Eca Art.No.	H05Z1Z1-F halogen free B2ca s1 d1 a1 Art.No.	H05Z1Z1-F halogen free Cca s1 d1 a1 Art.No.
Cable color:			■ black	■ black	■ black
Color of coding:	■ black	1	91.232.1003.1	91.232.1073.1	91.232.1053.1
Application:	mains 250 V	2	91.232.2003.1	91.232.2073.1	91.232.2053.1
Marking of poles:	L, N, PE	3	91.232.3003.1	91.232.3073.1	91.232.3053.1
		4	91.232.4003.1	91.232.4073.1	91.232.4053.1
		5	91.232.5003.1	91.232.5073.1	91.232.5053.1
		6	91.232.6003.1	91.232.6073.1	91.232.6053.1
		7	91.232.7003.1	91.232.7073.1	91.232.7053.1
		8	91.232.8003.1	91.232.8073.1	91.232.8053.1
Cable color:			□ white	□ white	□ white
Color of coding:	□ white	1	91.232.1003.2	91.232.1073.2	91.232.1053.2
Application:	mains 250 V	2	91.232.2003.2	91.232.2073.2	91.232.2053.2
Marking of poles:	L, N, PE	3	91.232.3003.2	91.232.3073.2	91.232.3053.2
		4	91.232.4003.2	91.232.4073.2	91.232.4053.2
		5	91.232.5003.2	91.232.5073.2	91.232.5053.2
		6	91.232.6003.2	91.232.6073.2	91.232.6053.2
		7	91.232.7003.2	91.232.7073.2	91.232.7053.2
		8	91.232.8003.2	91.232.8073.2	91.232.8053.2
Cable color:			■ black		
Color of coding:	■ brown	1	91.232.1003.4		
Application:	switch funktion 250 V	2	91.232.2003.4		
Marking of poles:	1, 2, 3	3	91.232.3003.4		
		4	91.232.4003.4		
		5	91.232.5003.4		
		6	91.232.6003.4		
		7	91.232.7003.4		
		8	91.232.8003.4		

connection cable, female - free end

		Length (m)	H05Z1Z1-F halogen free Eca Art.No.
Cable color:			■ black
Color of coding:	■ black	1	91.232.1063.1
Application:	mains 250 V	2	91.232.2063.1
Marking of poles:	L, N, PE	3	
		4	
		5	91.232.5063.1
		6	
		7	
		8	
Cable color:			□ white
Color of coding:	□ white	1	91.232.1063.2
Application:	mains 250 V	2	91.232.2063.2
Marking of poles:	L, N, PE	3	91.232.3063.2
		4	91.232.4063.2
		5	91.232.5063.2
		6	91.232.6063.2
		7	91.232.7063.2
		8	91.232.8063.2
Cable color:			
Color of coding:	■ brown	1	
Application:	switch funktion 250 V	2	
Marking of poles:	1, 2, 3	3	
		4	
		5	
		6	
		7	
		8	

Technical changes reserved

GST15I3, CABLE ASSEMBLY, 3-POLE

1.5 mm², 16 A

TECHNICAL DATA

Rated voltage:	250 V	Lockable:	self-locking (unlocking by tool)
Rated current:	16 A		
Degree of protection (IP):	IP20	Preparation of conductor ends:	ultrasonically compressed wire ends

Additional technical data, see facts & data.

connection cable, male - free end

		Length (m)	H05VV-F halogenated Eca Art.No.	H05Z1Z1-F halogen free B2ca s1 d1 a1 Art.No.	H05Z1Z1-F halogen free Cca s1 d1 a1 Art.No.
Cable color:			■ black	■ black	■ black
Color of coding:	■ black	1	91.232.1004.1	91.232.1074.1	91.232.1054.1
Application:	mains 250 V	2	91.232.2004.1	91.232.2074.1	91.232.2054.1
Marking of poles:	L, N, PE	3	91.232.3004.1	91.232.3074.1	91.232.3054.1
		4	91.232.4004.1	91.232.4074.1	91.232.4054.1
		5	91.232.5004.1	91.232.5074.1	91.232.5054.1
		6	91.232.6004.1		
		7	91.232.7004.1	91.232.7074.1	91.232.7054.1
		8	91.232.8004.1		
Cable color:			□ white	□ white	□ white
Color of coding:	□ white	1	91.232.1004.2	91.232.1074.2	91.232.1054.2
Application:	mains 250 V	2	91.232.2004.2	91.232.2074.2	91.232.2054.2
Marking of poles:	L, N, PE	3	91.232.3004.2	91.232.3074.2	91.232.3054.2
		4	91.232.4004.2	91.232.4074.2	91.232.4054.2
		5	91.232.5004.2	91.232.5074.2	91.232.5054.2
		6	91.232.6004.2	91.232.6074.2	91.232.6054.2
		7	91.232.7004.2	91.232.7074.2	91.232.7054.2
		8	91.232.8004.2	91.232.8074.2	91.232.8054.2
Cable color:			■ black		
Color of coding:	■ brown	1	91.232.1004.4		
Application:	switch funktion 250 V	2	91.232.2004.4		
		3	91.232.3004.4		
Marking of poles:	1, 2, 3	4	91.232.4004.4		
		5	91.232.5004.4		
		6	91.232.6004.4		
		7	91.232.7004.4		
		8	91.232.8004.4		

connection cable, male - free end

		Length (m)	H05Z1Z1-F halogen free Eca Art.No.
Cable color:			■ black
Color of coding:	■ black	1	91.232.1064.1
Application:	mains 250 V	2	91.232.2064.1
Marking of poles:	L, N, PE	3	91.232.3064.1
		4	
		5	91.232.5064.1
		6	
		7	
		8	
Cable color:			□ white
Color of coding:	□ white	1	91.232.1064.2
Application:	mains 250 V	2	91.232.2064.2
Marking of poles:	L, N, PE	3	91.232.3064.2
		4	91.232.4064.2
		5	91.232.5064.2
		6	91.232.6064.2
		7	91.232.7064.2
		8	91.232.8064.2
Cable color:			
Color of coding:	■ brown	1	
Application:	switch funktion 250 V	2	
		3	
Marking of poles:	1, 2, 3	4	
		5	
		6	
		7	
		8	

GST15I3, CABLE ASSEMBLY, 3-POLE

1.5 mm², 16 A

TECHNICAL DATA			
Rated voltage:	250 V	Lockable:	self-locking (unlocking by tool)
Rated current:	16 A		
Degree of protection (IP):	IP20	Additional technical data, see facts & data.	

mains connection cable, female - male CEE 7/4

		Length (m)	H05VV-F halogenated Art.No.
Cable color:			■ black
Color of coding:	■ black	2	99.640.0000.0
Application:	mains 250 V	4	99.643.0000.0
Marking of poles:	L, N, PE		
Cable color:			□ white
Color of coding:	□ white	2	99.641.0000.0
Application:	mains 250 V	3	99.642.0000.0
Marking of poles:	L, N, PE	5	99.668.0000.0

adapter cable, GST18i3 male – GST15i3 female

		Length (m)	H05VV-F halogenated Eca Art.No.	H05Z1Z1-F halogen free Eca Art.No.
Cable color:			■ black	■ black
Color of coding:	■ black	1	91.232.1009.1	
Application:	mains 250 V	2	91.232.2009.1	91.232.2069.1
Marking of poles:	L, N, PE	3	91.232.3009.1	
		4	91.232.4009.1	
		5	91.232.5009.1	
		6	91.232.6009.1	
		7	91.232.7009.1	
Cable color:			□ white	□ white
Color of coding:	□ white	1	91.232.1009.2	91.232.1069.2
Application:	mains 250 V	2	91.232.2009.2	91.232.2069.2
Marking of poles:	L, N, PE	3	91.232.3009.2	91.232.3069.2
		4	91.232.4009.2	91.232.4069.2
		5	91.232.5009.2	91.232.5069.2
		6	91.232.6009.2	91.232.6069.2
		7	91.232.7009.2	91.232.7069.2
		8	91.232.8009.2	91.232.8069.2

Technical changes reserved

GST15I4, CONNECTOR, 4-POLE

SCREW CONNECTION

TECHNICAL DATA

Rated voltage:	250 V / 400 V	Cross section fine-stranded:	0,5 mm² - 2,5 mm²
Rated current:	16 A	Connection cross section solid:	0,5 mm² - 2,5 mm²
Degree of protection (IP):	IP20	Additional technical data, see facts & data.	
Terminations per pole:	1		
Lockable:	self-locking (unlocking by tool)		

female **male**

straight, in the 5 pole housing, for cables Ø 8.5-12.5 mm

Color of coding	Application	Marking of poles	female Art.No.	male Art.No.
■ black	mains 250/400 V	2, 1, PE, N	91.941.4053.1	91.942.4053.1
□ white	mains 250/400 V	2, 1, PE, N	91.941.4053.0	91.942.4053.0

female **male**

angled, in the 5 pole housing, for cables Ø 6-11.5 mm

Color of coding	Application	Marking of poles	female Art.No.	male Art.No.
■ black	mains 250/400 V	2, 1, PE, N	91.941.3053.1	91.942.3053.1
□ white	mains 250/400 V	2, 1, PE, N	91.941.3053.0	91.942.3053.0

female **male**

for cables Ø 6.5-12 mm

Color of coding	Application	Marking of poles	female Art.No.	male Art.No.
■ black	mains 250/400 V	2, 1, PE, N	91.941.4050.1	91.942.4050.1
□ white	mains 250/400 V	2, 1, PE, N	91.941.4050.0	91.942.4050.0
■ may green	customized (with PE)	1, 2, PE, 3/N	91.941.4250.0*	91.942.4250.0*
■ turquoise blue	customized (without PE)	1, 2, 3, 4/N	91.941.4650.0*	91.942.4650.0*

*) Alternative technical data, see facts & data.

GST15I4, DEVICE CONNECTOR, 4-POLE

SCREW CONNECTION

TECHNICAL DATA

Rated voltage:	250 V / 400 V	Cross section fine-stranded:	0,5 mm² - 2,5 mm²
Rated current:	16 A	Connection cross section solid:	0,5 mm² - 2,5 mm²
Degree of protection (IP):	IP20	Additional technical data, see facts & data.	
Terminations per pole:	1		
Lockable:	self-locking (unlocking by tool)		

female **male**

snap-in, housing material thickness 0.5-1.5 mm			female	male
Color of coding	**Application**	**Marking of poles**	**Art.No.**	**Art.No.**
■ black	mains 250/400 V	2, 1, PE, N	91.941.9050.1	91.942.9050.1
□ white	mains 250/400 V	2, 1, PE, N	91.941.9050.0	91.942.9050.0
■ may green	customized (with PE)	1, 2, PE, 3/N	91.941.9250.0*	91.942.9250.0*
■ turquoise blue	customized (without PE)	1, 2, 3, 4/N	91.941.9650.0*	91.942.9650.0*

female **male**

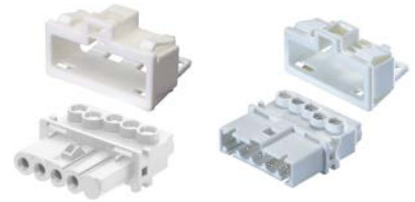

snap-in, housing material thickness 0.5-1.5 mm, in the 5 pole housing			female	male
Color of coding	**Application**	**Marking of poles**	**Art.No.**	**Art.No.**
■ black	mains 250/400 V	2, 1, PE, N	91.941.9053.1	91.942.9053.1
□ white	mains 250/400 V	2, 1, PE, N	91.941.9053.0	91.942.9053.0

SOLDERING CONNECTION

TECHNICAL DATA

Rated voltage:	250 V / 400 V	Terminations per pole:	1
Rated current:	16 A	Lockable:	self-locking (unlocking by tool)
Degree of protection (IP):	IP20	Additional technical data, see facts & data.	

female **male**

solder connector, horizontal, with fastening flange			female	male
Color of coding	**Application**	**Marking of poles**	**Art.No.**	**Art.No.**
■ black	mains 250/400 V	2, 1, PE, N	91.043.0150.1	91.044.0150.1
□ white	mains 250/400 V	2, 1, PE, N	91.043.0150.0	91.044.0150.0
■ may green	customized (with PE)	1, 2, PE, 3/N	91.043.1350.0*	91.044.1350.0*
■ turquoise blue	customized (without PE)	1, 2, 3, 4/N	91.043.1550.0*	91.044.1550.0*

female **male**

solder connector, horizontal, without fastening flange			female	male
Color of coding	**Application**	**Marking of poles**	**Art.No.**	**Art.No.**
■ black	mains 250/400 V	2, 1, PE, N	91.043.0050.1	91.044.0050.1
□ white	mains 250/400 V	2, 1, PE, N	91.043.0050.0	91.044.0050.0
■ may green	customized (with PE)	1, 2, PE, 3/N	91.043.1250.0*	91.044.1250.0*
■ turquoise blue	customized (without PE)	1, 2, 3, 4/N	91.043.1450.0*	91.044.1450.0*

female **male**

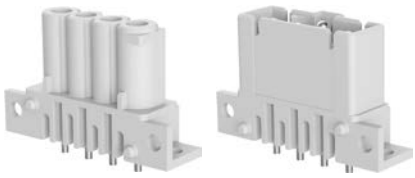

solder connector, vertical, with fastening flange			female	male
Color of coding	**Application**	**Marking of poles**	**Art.No.**	**Art.No.**
■ black	mains 250/400 V	2, 1, PE, N	91.041.0150.1	91.042.0150.1
□ white	mains 250/400 V	2, 1, PE, N	91.041.0150.0	91.042.0150.0
■ may green	customized (with PE)	1, 2, PE, 3/N	91.041.1350.0*	91.042.1350.0*
■ turquoise blue	customized (without PE)	1, 2, 3, 4/N	91.041.1550.0*	91.042.1550.0*

*) Alternative technical data, see facts & data.

Technical changes reserved

GST15I4, DEVICE CONNECTOR, 4-POLE

SOLDERING CONNECTION

TECHNICAL DATA

Rated voltage:	250 V / 400 V	Terminations per pole:	1
Rated current:	16 A	Lockable:	self-locking (unlocking by tool)
Degree of protection (IP):	IP20		

Additional technical data, see facts & data.

female **male**

solder connector, vertical, without fastening flange

Color of coding	Application	Marking of poles	female Art.No.	male Art.No.
■ black	mains 250/400 V	2, 1, PE, N	91.041.0050.1	91.042.0050.1
□ white	mains 250/400 V	2, 1, PE, N	91.041.0050.0	91.042.0050.0
■ may green	customized (with PE)	1, 2, PE, 3/N	91.041.1250.0*	91.042.1250.0*
■ turquoise blue	customized (without PE)	1, 2, 3, 4/N	91.041.1450.0*	91.042.1450.0*

female **male**

solder connector, horizontal, with fastening flange, in the 5 pole housing

Color of coding	Application	Marking of poles	female Art.No.	male Art.No.
■ black	mains 250/400 V	2, 1, PE, N	91.043.0153.1	91.044.0153.1
□ white	mains 250/400 V	2, 1, PE, N	91.043.0153.0	91.044.0153.0

female **male**

solder connector, horizontal, without fastening flange, in the 5 pole housing

Color of coding	Application	Marking of poles	female Art.No.	male Art.No.
■ black	mains 250/400 V	2, 1, PE, N	91.043.0053.1	91.044.0053.1
□ white	mains 250/400 V	2, 1, PE, N	91.043.0053.0	91.044.0053.0

female **male**

solder connector, vertical, with fastening flange, in the 5 pole housing

Color of coding	Application	Marking of poles	female Art.No.	male Art.No.
■ black	mains 250/400 V	2, 1, PE, N	91.041.0153.1	91.042.0153.1
□ white	mains 250/400 V	2, 1, PE, N	91.041.0153.0	91.042.0153.0

female **male**

solder connector, vertical, without fastening flange, in the 5 pole housing

Color of coding	Application	Marking of poles	female Art.No.	male Art.No.
■ black	mains 250/400 V	2, 1, PE, N	91.041.0053.1	91.042.0053.1
□ white	mains 250/400 V	2, 1, PE, N	91.041.0053.0	91.042.0053.0

*) Alternative technical data, see facts & data.

GST15I4, DISTRIBUTOR, 4-POLE

TECHNICAL DATA			
Rated voltage:	250 V / 400 V	Lockable:	self-locking (unlocking by tool)
Rated current:	16 A		
Degree of protection (IP):	IP20	Additional technical data, see facts & data.	

intermediate coupling, not lockable, without fastening option, in the 5 pole housing

Color of coding	Application	Marking of poles	Art.No.
■ black	mains 250/400 V	2, N, PE, 1	91.040.5953.1
□ white	mains 250/400 V	2, 1, PE, N	91.040.5953.0

Technical changes reserved

GST15I4, CABLE ASSEMBLY, 4-POLE

1.5 mm², 16 A

TECHNICAL DATA

Rated voltage:	250 V / 400 V	Lockable:	self-locking (unlocking by tool)
Rated current:	16 A		
Degree of protection (IP):	IP20	Additional technical data, see facts & data.	

connecting cable, female - male, in the 5 pole housing

Cable color:
Color of coding: ☐ white
Application: mains 250/400 V
Marking of poles: 2, 1, PE, N

Length (m)	H05VV-F halogenated Eca Art.No.	H05Z1Z1-F halogen free B2ca s1 d1 a1 Art.No.	H05Z1Z1-F halogen free Cca s1 d1 a1 Art.No.
	☐ white	☐ white	☐ white
1	91.207.1000.2	91.207.1070.2	91.207.1050.2
2	91.207.2000.2	91.207.2070.2	91.207.2050.2
3	91.207.3000.2	91.207.3070.2	91.207.3050.2
4	91.207.4000.2	91.207.4070.2	91.207.4050.2
5	91.207.5000.2		
6		91.207.6070.2	91.207.6050.2
8	91.207.8000.2	91.207.8070.2	91.207.8050.2

connecting cable, female - male, in the 5 pole housing

Cable color:
Color of coding: ☐ white
Application: mains 250/400 V
Marking of poles: 2, 1, PE, N

Length (m)	H05Z1Z1-F halogen free Eca Art.No.
	☐ white
1	91.207.1060.2
2	91.207.2060.2
3	91.207.3060.2
4	91.207.4060.2
5	
6	91.207.6060.2
8	91.207.8060.2

GST15I4, CABLE ASSEMBLY, 4-POLE

1.5 mm², 16 A

TECHNICAL DATA

Rated voltage:	250 V / 400 V	Lockable:	self-locking (unlocking by tool)
Rated current:	16 A		
Degree of protection (IP):	IP20	Preparation of conductor ends:	ultrasonically compressed wire ends

Additional technical data, see facts & data.

connection cable, Female - free end, in the 5 pole housing

Cable color:	
Color of coding:	☐ white
Application:	mains 250/400 V
Marking of poles:	2, 1, PE, N

Length (m)	H05VV-F halogenated Eca Art.No.	H05Z1Z1-F halogen free B2ca s1 d1 a1 Art.No.	H05Z1Z1-F halogen free Cca s1 d1 a1 Art.No.
	☐ white	☐ white	☐ white
1	91.207.1003.2	91.207.1073.2	91.207.1053.2
2	91.207.2003.2		
3	91.207.3003.2	91.207.3073.2	91.207.3053.2
5	91.207.5003.2	91.207.5073.2	91.207.5053.2

connection cable, Female - free end, in the 5 pole housing

Cable color:	
Color of coding:	☐ white
Application:	mains 250/400 V
Marking of poles:	2, 1, PE, N

Length (m)	H05Z1Z1-F halogen free Eca Art.No.
	☐ white
1	91.207.1063.2
2	
3	91.207.3063.2
5	91.207.5063.2

Technical changes reserved

GST15I4, CABLE ASSEMBLY, 4-POLE

1.5 mm², 16 A

TECHNICAL DATA

Rated voltage:	250 V / 400 V	Lockable:	self-locking (unlocking by tool)
Rated current:	16 A		
Degree of protection (IP):	IP20	Preparation of conductor ends:	ultrasonically compressed wire ends

Additional technical data, see facts & data.

connection cable, Male - free end, in the 5 pole housing

Cable color:
Color of coding: ☐ white
Application: mains 250/400 V
Marking of poles: 2, 1, PE, N

Length (m)	H05VV-F halogenated Eca Art.No.	H05Z1Z1-F halogen free B2ca s1 d1 a1 Art.No.	H05Z1Z1-F halogen free Cca s1 d1 a1 Art.No.
	☐ white	☐ white	☐ white
1	91.207.1004.2	91.207.1074.2	91.207.1054.2
2	91.207.2004.2		
3	91.207.3004.2		
4	91.207.4004.2		
5	91.207.5004.2		
6	91.207.6004.2		
7	91.207.7004.2		
8	91.207.8004.2		

connection cable, Male - free end, in the 5 pole housing

Cable color:
Color of coding: ☐ white
Application: mains 250/400 V
Marking of poles: 2, 1, PE, N

Length (m)	H05Z1Z1-F halogen free Eca Art.No.
	☐ white
1	91.207.1064.2
2	
3	
4	
5	
6	
7	
8	

GST15I5, CONNECTOR, 5-POLE

SCREW CONNECTION

TECHNICAL DATA

Rated voltage:	250 V / 400 V	Cross section fine-stranded:	0,5 mm² - 2,5 mm²
Rated current:	16 A	Connection cross section solid:	0,5 mm² - 2,5 mm²
Degree of protection (IP):	IP20	Additional technical data, see facts & data.	
Terminations per pole:	1		
Lockable:	self-locking (unlocking by tool)		

female **male**

straight, for cables Ø 8.5-12.5 mm

Color of coding	Application	Marking of poles	female Art.No.	male Art.No.
■ black	mains 250/400 V	3, N, PE, 2, 1	91.951.4053.1	91.952.4053.1
□ white	mains 250/400 V	3, N, PE, 2, 1	91.951.4053.0	91.952.4053.0
■ pastel blue	mains 250 V + not SELV	L, N, PE, D2, D1	91.951.4453.0	91.952.4453.0
■ light blue	SELV	1, 2, 3, 4, 5	91.951.4353.0*	91.952.4353.0*
■ may green	customized (with PE)	1, 2, PE, 3, 4/N	91.951.4253.0*	91.952.4253.0*
■ turquoise blue	customized (without PE)	1, 2, 3, 4, 5/N	91.951.4653.0*	91.952.4653.0*

female **male**

angled, for cables Ø 6-11.5 mm

Color of coding	Application	Marking of poles	female Art.No.	male Art.No.
■ black	mains 250/400 V	3, 2, 1, PE, N	91.951.3053.1	91.952.3053.1
□ white	mains 250/400 V	3, 2, 1, PE, N	91.951.3053.0	91.952.3053.0
■ pastel blue	mains 250 V + not SELV	L, N, PE, D2, D1	91.951.3453.0	91.952.3453.0
■ light blue	SELV	1, 2, 3, 4, 5	91.951.3353.0*	91.952.3353.0*
■ may green	customized (with PE)	1, 2, PE, 3, 4/N	91.951.3253.0*	91.952.3253.0*
■ turquoise blue	customized (without PE)	1, 2, 3, 4, 5/N	91.951.3653.0*	91.952.3653.0*
□ no-flame white	no-flame acc. IEC 60335-1	3, 2, 1, N, PE	91.951.3057.0	

*) Alternative technical data, see facts & data.

Technical changes reserved

GST15I5, DEVICE CONNECTOR, 5-POLE

SCREW CONNECTION

TECHNICAL DATA

Rated voltage:	250 V / 400 V	Cross section fine-stranded:	0,5 mm² - 2,5 mm²
Rated current:	16 A	Connection cross section solid:	0,5 mm² - 2,5 mm²
Degree of protection (IP):	IP20	Additional technical data, see facts & data.	
Terminations per pole:	1		
Lockable:	self-locking (unlocking by tool)		

female **male**

snap-in, housing material thickness 0.5-1.5 mm			female	male
Color of coding	**Application**	**Marking of poles**	**Art.No.**	**Art.No.**
■ black	mains 250/400 V	3, 2, 1, PE, N	91.951.9053.1	91.952.9053.1
□ white	mains 250/400 V	3, 2, 1, PE, N	91.951.9053.0	91.952.9053.0
■ pastel blue	mains 250 V + not SELV	D1, D2, L, PE, N	91.951.9453.0	91.952.9453.0
■ light blue	SELV	1, 2, 3, 4, 5	91.951.9353.0*	91.952.9353.0*
■ may green	customized (with PE)	1, 2, PE, 3, 4/N	91.951.9253.0*	91.952.9253.0*
■ turquoise blue	customized (without PE)	1, 2, 3, 4, 5/N	91.951.9653.0*	91.952.9653.0*

SOLDERING CONNECTION

TECHNICAL DATA

Rated voltage:	250 V / 400 V	Terminations per pole:	1
Rated current:	16 A	Lockable:	self-locking (unlocking by tool)
Degree of protection (IP):	IP20	Additional technical data, see facts & data.	

female **male**

solder connector, horizontal, with fastening flange			female	male
Color of coding	**Application**	**Marking of poles**	**Art.No.**	**Art.No.**
■ black	mains 250/400 V	3, 2, 1, PE, N	91.053.0153.1	91.054.0153.1
□ white	mains 250/400 V	3, 2, 1, PE, N	91.053.0153.0	91.054.0153.0
■ pastel blue	mains 250 V + not SELV	L, N, PE, D2, D1	91.053.0353.0	91.054.0353.0
■ light blue	SELV	1, 2, 3, 4, 5	91.053.0553.0*	91.054.0553.0*
■ may green	customized (with PE)	1, 2, PE, 3, 4/N	91.053.1353.0*	91.054.1353.0*
■ turquoise blue	customized (without PE)	1, 2, 3, 4, 5/N	91.053.1553.0*	91.054.1553.0*

female **male**

solder connector, horizontal, without fastening flange			female	male
Color of coding	**Application**	**Marking of poles**	**Art.No.**	**Art.No.**
■ black	mains 250/400 V	3, 2, 1, PE, N	91.053.0053.1	91.054.0053.1
□ white	mains 250/400 V	3, 2, 1, PE, N	91.053.0053.0	91.054.0053.0
■ pastel blue	mains 250 V + not SELV	L, N, PE, D2, D1	91.053.0253.0	91.054.0253.0
■ light blue	SELV	1, 2, 3, 4, 5	91.053.0453.0*	91.054.0453.0*
■ may green	customized (with PE)	1, 2, PE, 3, 4/N	91.053.1253.0*	91.054.1253.0*
■ turquoise blue	customized (without PE)	1, 2, 3, 4, 5/N	91.053.1453.0*	91.054.1453.0*

female **male**

solder connector, vertical, with fastening flange			female	male
Color of coding	**Application**	**Marking of poles**	**Art.No.**	**Art.No.**
■ black	mains 250/400 V	3, 2, 1, PE, N	91.051.0153.1	91.052.0153.1
□ white	mains 250/400 V	3, 2, 1, PE, N	91.051.0153.0	91.052.0153.0
■ pastel blue	mains 250 V + not SELV	L, N, PE, D2, D1	91.051.0353.0	91.052.0353.0
■ light blue	SELV	1, 2, 3, 4, 5	91.051.0553.0*	91.052.0553.0*
■ may green	customized (with PE)	1, 2, PE, 3, 4/N	91.051.1353.0*	91.052.1353.0*
■ turquoise blue	customized (without PE)	1, 2, 3, 4, 5/N	91.051.1553.0*	91.052.1553.0*

*) Alternative technical data, see facts & data.

GST15I5, DEVICE CONNECTOR, 5-POLE

SOLDERING CONNECTION

TECHNICAL DATA

Rated voltage:	250 V / 400 V	Terminations per pole:	1
Rated current:	16 A	Lockable:	self-locking (unlocking by tool)
Degree of protection (IP):	IP20		

Additional technical data, see facts & data.

female

male

solder connector, vertical, without fastening flange

Color of coding	Application	Marking of poles	female Art.No.	male Art.No.
■ black	mains 250/400 V	3, 2, 1, PE, N	91.051.0053.1	91.052.0053.1
□ white	mains 250/400 V	3, 2, 1, PE, N	91.051.0053.0	91.052.0053.0
■ pastel blue	mains 250 V + not SELV	L, N, PE, D2, D1	91.051.0253.0	91.052.0253.0
■ light blue	SELV	1, 2, 3, 4, 5	91.051.0453.0*	91.052.0453.0*
■ may green	customized (with PE)	1, 2, PE, 3, 4/N	91.051.1253.0*	91.052.1253.0*
■ turquoise blue	customized (without PE)	1, 2, 3, 4, 5/N	91.051.1453.0*	91.052.1453.0*

*) Alternative technical data, see facts & data.

Technical changes reserved

GST15I5, DISTRIBUTOR, 5-POLE

TECHNICAL DATA

Rated voltage:	250 V / 400 V	Lockable:	self-locking (unlocking by tool)
Rated current:	16 A		
Degree of protection (IP):	IP20	Additional technical data, see facts & data.	

h-distributor, with fastening option to 07.418.9153.1

Color of coding	Application	Marking of poles	Art.No.
■ black	mains 250/400 V	3, N, PE, 2, 1	91.050.7053.1*
□ white	mains 250/400 V	3, N, PE, 2, 1	91.050.7053.0*
■ pastel blue	mains 250 V + not SELV	D1, D2, L, PE, N	91.050.7153.0*
■ light blue	SELV	1, 2, 3, 4, 5	91.050.7253.0*
■ may green	customized (with PE)	1, 2, PE, 3, 4/N	91.050.7353.0*
■ turquoise blue	customized (without PE)	1, 2, 3, 4, 5/N	91.050.7453.0*

phase selection distributor, without fastening option

Color of coding	Application	Marking of poles	Art.No.
□ white	Mains 250/400 V, tapping L1	3, N, PE, 2, 1	91.050.3151.0*
□ white	Mains 250/400 V, tapping L2	3, N, PE, 2, 1	91.050.3251.0*
□ white	Mains 250/400 V, tapping L3	3, N, PE, 2, 1	91.050.3351.0*

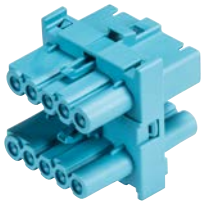

H-distributor, with fastening option to 07.418.9153.1

Color of coding	Application	Marking of poles	Art.No.
■ black	mains 250/400 V	3, N, PE, 2, 1	91.050.4953.1*
□ white	mains 250/400 V	3, N, PE, 2, 1	91.050.4953.0*
■ pastel blue	mains 250 V + not SELV	D1, D2, L, PE, N	91.050.5053.0*
■ light blue	SELV	1, 2, 3, 4, 5	91.050.5153.0*
■ may green	customized (with PE)	1, 2, PE, 3, 4/N	91.050.5253.0*
■ turquoise blue	customized (without PE)	1, 2, 3, 4, 5/N	91.050.5353.0*

intermediate coupling, without fastening option

Color of coding	Application	Marking of poles	Art.No.
■ black	mains 250/400 V	3, N, PE, 2, 1	91.050.5953.1
□ white	mains 250/400 V	3, N, PE, 2, 1	91.050.5953.0
■ pastel blue	mains 250 V + not SELV	D1, D2, L, PE, N	91.050.6053.0
■ light blue	SELV	1, 2, 3, 4, 5	91.050.6153.0*

*) Alternative technical data, see facts & data.

GST15I5, CABLE ASSEMBLY, 5-POLE

1.5 mm², 16 A

TECHNICAL DATA

Rated voltage:	250 V / 400 V	Lockable:	self-locking (unlocking by tool)
Rated current:	16 A		
Degree of protection (IP):	IP20	Additional technical data, see facts & data.	

connecting cable, female - male

		Length (m)	H05VV-F halogenated Eca Art.No.	H05Z1Z1-F halogen free B2ca s1 d1 a1 Art.No.	H05Z1Z1-F halogen free Cca s1 d1 a1 Art.No.
Cable color:			■ black	■ black	■ black
Color of coding:	■ black	1	91.257.1000.1	91.257.1070.1	91.257.1050.1
Application:	mains 250/400 V	2	91.257.2000.1		
Marking of poles:	3, 2, 1, PE, N	3	91.257.3000.1	91.257.3070.1	91.257.3050.1
		4	91.257.4000.1	91.257.4070.1	91.257.4050.1
Cable color:			□ white	□ white	□ white
Color of coding:	□ white	1	91.257.1000.2	91.257.1070.2	91.257.1050.2
Application:	mains 250/400 V	2	91.257.2000.2	91.257.2070.2	91.257.2050.2
Marking of poles:	3, 2, 1, PE, N	3	91.257.3000.2	91.257.3070.2	91.257.3050.2
		4	91.257.4000.2	91.257.4070.2	91.257.4050.2
		5	91.257.5000.2	91.257.5070.2	91.257.5050.2
		8		91.252.8070.2	91.252.8050.2
Cable color:			□ white	□ white	□ white
Color of coding:	■ pastel blue	1	91.257.1000.9	91.257.1070.9	91.257.1050.9
Application:	mains 250 V + not SELV	2	91.257.2000.9	91.257.2070.9	91.257.2050.9
		3	91.257.3000.9	91.257.3070.9	91.257.3050.9
Marking of poles:	D1, D2, L, PE, N	4	91.257.4000.9	91.257.4070.9	91.257.4050.9
		5	91.257.5000.9	91.257.5070.9	91.257.5050.9
		6	91.257.6000.9	91.257.6070.9	91.257.6050.9
		7	91.257.7000.9	91.257.7070.9	91.257.7050.9
		8	91.257.8000.9	91.257.8070.9	91.257.8050.9

connecting cable, female - male

		Length (m)	H05Z1Z1-F halogen free Eca Art.No.
Cable color:			■ black
Color of coding:	■ black	1	91.257.1060.1
Application:	mains 250/400 V	2	91.257.2060.1
Marking of poles:	3, 2, 1, PE, N	3	91.257.3060.1
		4	
Cable color:			□ white
Color of coding:	□ white	1	91.257.1060.2
Application:	mains 250/400 V	2	91.257.2060.2
Marking of poles:	3, 2, 1, PE, N	3	91.257.3060.2
		4	91.257.4060.2
		5	
		8	
Cable color:			□ white
Color of coding:	■ pastel blue	1	91.257.1060.9
Application:	mains 250 V + not SELV	2	91.257.2060.9
		3	91.257.3060.9
Marking of poles:	D1, D2, L, PE, N	4	91.257.4060.9
		5	91.257.5060.9
		6	
		7	
		8	

Technical changes reserved

GST15I5, CABLE ASSEMBLY, 5-POLE

1.5 mm², 16 A

TECHNICAL DATA

Rated voltage:	250 V / 400 V	Lockable:	self-locking (unlocking by tool)
Rated current:	16 A		
Degree of protection (IP):	IP20	Preparation of conductor ends:	ultrasonically compressed wire ends

Additional technical data, see facts & data.

connection cable, female - free end

		Length (m)	H05VV-F halogenated Eca Art.No.	H05Z1Z1-F halogen free B2ca s1 d1 a1 Art.No.	H05Z1Z1-F halogen free Cca s1 d1 a1 Art.No.
Cable color:			■ black	■ black	■ black
Color of coding:	■ black	1	91.257.1003.1	91.257.1073.1	91.257.1053.1
Application:	mains 250/400 V	2	91.257.2003.1	91.257.2073.1	91.257.2053.1
Marking of poles:	3, 2, 1, PE, N	3	91.257.3003.1	91.257.3073.1	91.257.3053.1
		4	91.257.4003.1		
		6	91.257.6003.1	91.257.6073.1	91.257.6053.1
Cable color:			□ white	□ white	□ white
Color of coding:	□ white	1	91.257.1003.2	91.257.1073.2	91.257.1053.2
Application:	mains 250/400 V	2	91.257.2003.2	91.257.2073.2	91.257.2053.2
Marking of poles:	3, 2, 1, PE, N	3	91.257.3003.2	91.257.3073.2	91.257.3053.2
		5	91.257.5003.2	91.257.5073.2	91.257.5053.2
		6	91.257.6003.2	91.257.6073.2	91.257.6053.2
Cable color:			□ white	□ white	□ white
Color of coding:	■ pastel blue	1	91.257.1003.9	91.257.1073.9	91.257.1053.9
Application:	mains 250 V + not SELV	2	91.257.2003.9	91.257.2073.9	91.257.2053.9
		3	91.257.3003.9	91.257.3073.9	91.257.3053.9
Marking of poles:	D1, D2, L, PE, N	4	91.257.4003.9	91.257.4073.9	91.257.4053.9
		5	91.257.5003.9	91.257.5073.9	91.257.5053.9
		6	91.257.6003.9	91.257.6073.9	91.257.6053.9
		7	91.257.7003.9	91.257.7073.9	91.257.7053.9
		8	91.257.8003.9	91.257.8073.9	91.257.8053.9

connection cable, female - free end

		Length (m)	H05Z1Z1-F halogen free Eca Art.No.
Cable color:			■ black
Color of coding:	■ black	1	91.257.1063.1
Application:	mains 250/400 V	2	91.257.2063.1
Marking of poles:	3, 2, 1, PE, N	3	
		4	
		6	
Cable color:			□ white
Color of coding:	□ white	1	91.257.1063.2
Application:	mains 250/400 V	2	91.257.2063.2
Marking of poles:	3, 2, 1, PE, N	3	91.257.3063.2
		5	
		6	
Cable color:			□ white
Color of coding:	■ pastel blue	1	91.257.1063.9
Application:	mains 250 V + not SELV	2	91.257.2063.9
		3	91.257.3063.9
Marking of poles:	D1, D2, L, PE, N	4	
		5	91.257.5063.9
		6	
		7	
		8	

GST15I5, CABLE ASSEMBLY, 5-POLE

1.5 mm², 16 A

TECHNICAL DATA

Rated voltage:	250 V / 400 V	Lockable:	self-locking (unlocking by tool)
Rated current:	16 A		
Degree of protection (IP):	IP20	Preparation of conductor ends:	ultrasonically compressed wire ends

Additional technical data, see facts & data.

connection cable, male - free end

		Length (m)	H05VV-F halogenated Eca Art.No.	H05Z1Z1-F halogen free B2ca s1 d1 a1 Art.No.	H05Z1Z1-F halogen free Cca s1 d1 a1 Art.No.
Cable color:			■ black	■ black	■ black
Color of coding:	■ black	1			
Application:	mains 250/400 V	2	91.257.2004.1	91.257.2074.1	91.257.2054.1
Marking of poles:	3, 2, 1, PE, N	3	91.257.3004.1	91.257.3074.1	91.257.3054.1
		4	91.257.4004.1		
		6	91.257.6004.1	91.257.6074.1	91.257.6054.1
Cable color:			□ white	□ white	□ white
Color of coding:	□ white	1	91.257.1004.2	91.257.1074.2	91.257.1054.2
Application:	mains 250/400 V	2	91.257.2004.2	91.257.2074.2	91.257.2054.2
Marking of poles:	3, 2, 1, PE, N	3	91.257.3004.2	91.257.3074.2	91.257.3054.2
		5	91.257.5004.2	91.257.5074.2	91.257.5054.2
		6	91.257.6004.2	91.257.6074.2	91.257.6054.2
		8			
Cable color:			□ white	□ white	□ white
Color of coding:	■ pastel blue	1	91.257.1004.9	91.257.1074.9	91.257.1054.9
Application:	mains 250 V + not SELV	2	91.257.2004.9	91.257.2074.9	91.257.2054.9
		3	91.257.3004.9	91.257.3074.9	91.257.3054.9
Marking of poles:	D1, D2, L, PE, N	4	91.257.4004.9	91.257.4074.9	91.257.4054.9
		5	91.257.5004.9	91.257.5074.9	91.257.5054.9
		6	91.257.6004.9	91.257.6074.9	91.257.6054.9
		7	91.257.7004.9	91.257.7074.9	91.257.7054.9
		8	91.257.8004.9	91.257.8074.9	91.257.8054.9

connection cable, male - free end

		Length (m)	H05Z1Z1-F halogen free Eca Art.No.
Cable color:			■ black
Color of coding:	■ black	1	91.257.1064.1
Application:	mains 250/400 V	2	91.257.2064.1
Marking of poles:	3, 2, 1, PE, N	3	91.257.3064.1
		4	
		6	
Cable color:			□ white
Color of coding:	□ white	1	91.257.1064.2
Application:	mains 250/400 V	2	91.257.2064.2
Marking of poles:	3, 2, 1, PE, N	3	
		5	
		6	91.257.6064.2
		8	91.257.8064.2
Cable color:			□ white
Color of coding:	■ pastel blue	1	91.257.1064.9
Application:	mains 250 V + not SELV	2	91.257.2064.9
		3	91.257.3064.9
Marking of poles:	D1, D2, L, PE, N	4	
		5	
		6	
		7	
		8	

Technical changes reserved

GST15I5, CABLE ASSEMBLY, 5-POLE

1.5 mm², 16 A

TECHNICAL DATA			
Rated voltage:	250 V	Lockable:	self-locking (unlocking by tool)
Rated current:	16 A		
Degree of protection (IP):	IP20	Additional technical data, see facts & data.	

adapter cable, GST18i5 male – GST15i5 female

		Length (m)	H05VV-F halogenated Eca Art.No.
Cable color:			☐ white
Color of coding:	■ pastel blue	0.5	99.400.1574.0
Application:	mains 250 V + not SELV	1.5	G0.501.0105.8
		3	G0.501.0105.9
Marking of poles:	D1, D2, L, PE, N	3.5	99.401.1574.0
		5	G0.501.0106.0

GST15I5, CABLE ASSEMBLY, 5-POLE

2.5 mm², 16 A

TECHNICAL DATA

Rated voltage:	250 V / 400 V	Lockable:	self-locking (unlocking by tool)
Rated current:	16 A		
Degree of protection (IP):	IP20	Additional technical data, see facts & data.	

connecting cable, female - male

		Length (m)	H05Z1Z1-F halogen free Eca Art.No.
Cable color:			☐ white
Color of coding:	☐ white	1	91.253.1060.2
Application:	mains 250/400 V	2	91.253.2060.2
Marking of poles:	3, 2, 1, N, PE	4	91.253.4060.2
		6	91.253.6060.2
		8	91.253.8060.2

TECHNICAL DATA

Rated voltage:	250 V / 400 V	Lockable:	self-locking (unlocking by tool)
Rated current:	16 A		
Degree of protection (IP):	IP20	Preparation of conductor ends:	ultrasonically compressed wire ends
		Additional technical data, see facts & data.	

connection cable, female - free end

		Length (m)	H05Z1Z1-F halogen free Eca Art.No.
Cable color:			☐ white
Color of coding:	☐ white	1	91.253.1063.2
Application:	mains 250/400 V	2	91.253.2063.2
Marking of poles:	3, 2, 1, N, PE	4	91.253.4063.2
		6	91.253.6063.2
		8	91.253.8063.2

Technical changes reserved

GST15I5, CABLE ASSEMBLY, 5-POLE

2.5 mm², 16 A

TECHNICAL DATA			
Rated voltage:	250 V / 400 V	Lockable:	self-locking (unlocking by tool)
Rated current:	16 A		
Degree of protection (IP):	IP20	Preparation of conductor ends:	ultrasonically compressed wire ends
		Additional technical data, see facts & data.	

connection cable, male - free end

Cable color:	
Color of coding:	☐ white
Application:	mains 250/400 V
Marking of poles:	3, 2, 1, N, PE

Length (m)	H05Z1Z1-F halogen free Eca Art.No.
	☐ white
1	91.253.1064.2
2	91.253.2064.2
4	91.253.4064.2
6	91.253.6064.2
8	91.253.8064.2

GST15, ACCESSORIES

mounting part, for h/H-distributor with mounting option

Color	Art.No.
■ black	07.418.9153.1

mounting part, for HH-distributor with mounting option

Color	Art.No.
■ black	07.418.9253.1

serviceplug

Color	Application	Marking of poles	Art.No.
■ light blue	SELV	1, 2, 3, 4, 5	91.002.5453.0

Technical changes reserved

GESIS® MICRO **INVISIBLE** INSTALLATION

This connector system outside fixed installations enables equipment like luminaires in furniture and shelving to be connected safely and flexibly in an extremely easy and minimalistic manner. As a result, the electrical installation is reduced to a minimum and does not distract from what is important. Given that gesis® MICRO is optimally matched to the entire gesis® family, this enables a completely integrated system, from the distribution unit to the equipment and to the product carrier.

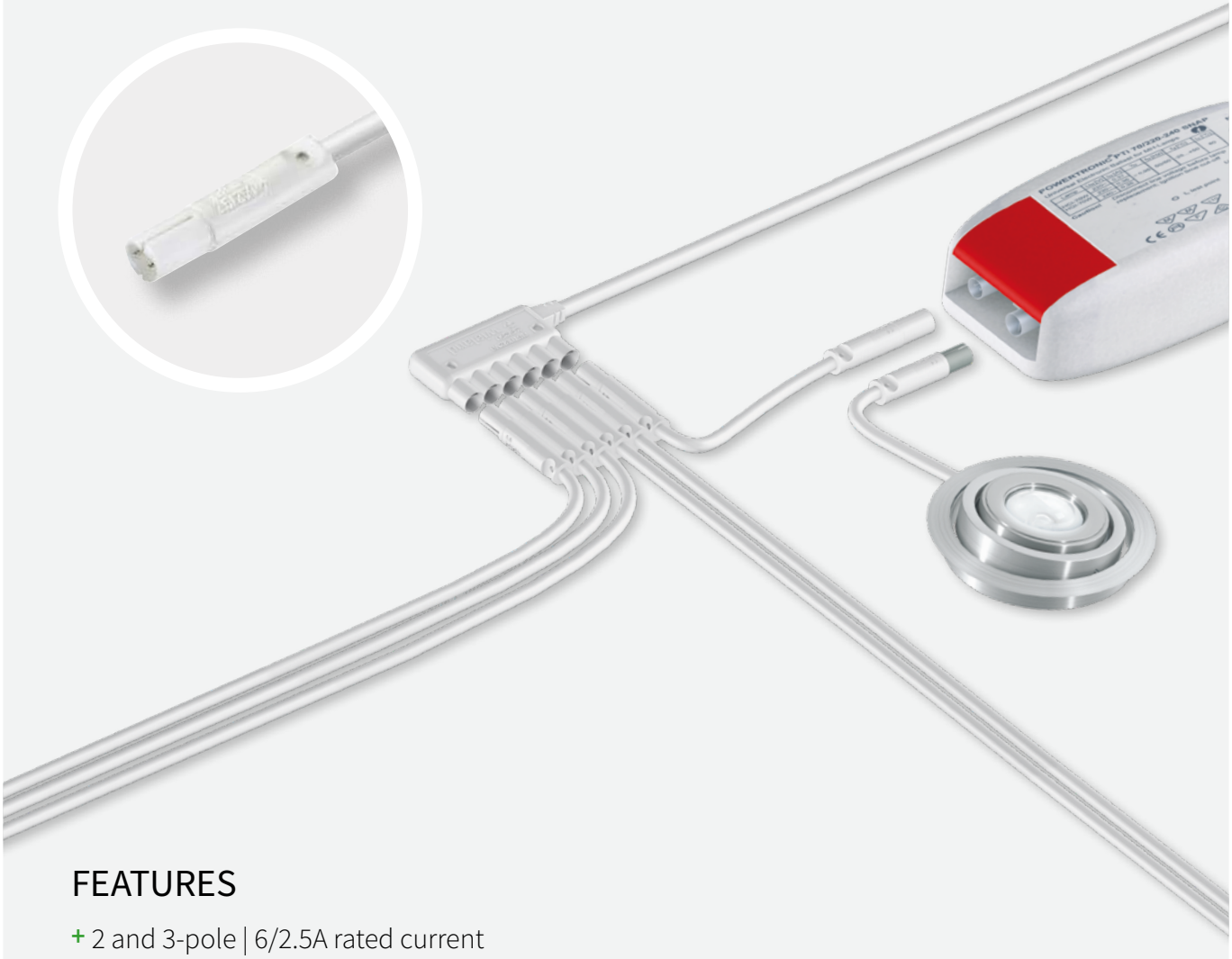

FEATURES

+ 2 and 3-pole | 6/2.5A rated current
+ Small diameter of just 8 mm
+ Thanks to the adapter cables for gesis® MINI and national plug-in devices, the entire flexible installation runs smoothly, from the infrastructure to the product carrier.
+ Suitable for use as installation material outside fixed installations

CODING OF **GST08 CONNECTORS**

GST08i2

Code 1	Code 2	Code 3	Code 5
L, N	+, -	+, -	+, -
white	**blue**	**green**	**yellow**
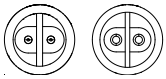	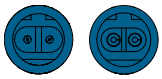	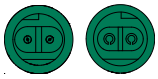	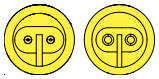
Application	**Application**	**Application**	**Application**
Mains voltage protection class II	Extra-low voltage parallel (e.g. 12 V)	Extra-low voltage parallel (e.g. 24 V)	Extra-low voltage series (Constant current)

GST08i3

Code 1
L, N, PE
white
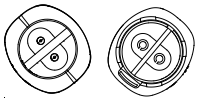
Application
Mains voltage

GST08I2, DEVICE CONNECTOR, 2-POLE

SOLDERING CONNECTION

TECHNICAL DATA			
Rated voltage:	250 V	Terminations per pole:	1
Rated current:	2.5 A	Lockable:	No
Degree of protection (IP):	IP20	Additional technical data, see facts & data.	

female **male**

solder connector, horizontal, with fastening flange			female	male
Color of coding	**Application**	**Marking of poles**	**Art.No.**	**Art.No.**
☐ white	mains 250 V		90.031.0153.0	90.032.0153.0
■ green	SELV	+, -	90.011.0153.0*	90.012.0153.0*
■ light blue	SELV		90.001.0153.0*	90.002.0153.0*
■ yellow	SELV serial	+, -	90.021.0153.0*	90.022.0153.0*

*) Alternative technical data, see facts & data.

Technical changes reserved

GST08I2, DISTRIBUTOR, 2-POLE

TECHNICAL DATA			
Rated voltage:	250 V	Lockable:	No
Rated current:	2.5 A	Additional technical data, see facts & data.	
Degree of protection (IP):	IP20		

h-distributor, without fastening option

Color of coding	Application	Marking of poles	Art.No.
☐ white	protection class II 250 V		90.030.0153.0
■ green	SELV		90.010.0153.0*
■ light blue	SELV		90.000.0153.0*
■ yellow	SELV serial	+, -	90.020.0153.0*

sixfold distributor, input GST08

Color of coding	Application	Marking of poles	Length (m)	Art.No.
☐ white	protection class II 250 V		0,5 m	90.230.0526.2
■ green	SELV	+, -	3 m	90.210.3026.2*

TECHNICAL DATA			
Rated voltage:	50 V	Lockable:	No
Rated current:	6 A	Additional technical data, see facts & data.	
Degree of protection (IP):	IP20		

sixfold distributor, input free end

Color of coding	Application	Marking of poles	Length (m)	Art.No.
■ green	SELV	+, -	0,2 m	99.419.0000.8*
■ light blue	SELV	+, -	0,2 m	99.413.0000.8*

*) Alternative technical data, see facts & data.

GST08I2, CABLE ASSEMBLY, 2-POLE

0.5 mm², 6 A

TECHNICAL DATA

Rated voltage:	50 V	Lockable:	No
Rated current:	6 A	Additional technical data, see facts & data.	
Degree of protection (IP):	IP20		

connecting cable, female - male

LiYZ
halogenated

		Length (m)	Art.No.
Cable color:			☐ white
Color of coding:	■ green	0.5	90.215.0530.2
Application:	SELV	1	90.215.1030.2
Marking of poles:		1.5	90.215.1530.2

TECHNICAL DATA

Rated voltage:	50 V	Lockable:	No
Rated current:	6 A	Preparation of conductor ends:	cable end sleeve without insulating shroud
Degree of protection (IP):	IP20	Additional technical data, see facts & data.	

connection cable, female - free end

LiYZ
halogenated

		Length (m)	Art.No.
Cable color:			☐ white
Color of coding:	■ green	0.5	90.215.0533.2
Application:	SELV	1	90.215.1033.2
Marking of poles:		1.5	90.215.1533.2

Technical changes reserved

GST08I2, CABLE ASSEMBLY, 2-POLE

0.5 mm², 6 A

TECHNICAL DATA

Rated voltage:	50 V	Lockable:	No
Rated current:	6 A	Preparation of conductor ends:	cable end sleeve without insulating shroud
Degree of protection (IP):	IP20		

Additional technical data, see facts & data.

connection cable, male - free end

LiYZ
halogenated

Cable color:	
Color of coding:	■ green
Application:	SELV
Marking of poles:	

Length (m)	Art.No.
	☐ white
0.5	90.215.0534.2
1	90.215.1034.2
1.5	90.215.1534.2

GST08I2, CABLE ASSEMBLY, 2-POLE

0.75 mm², 2.5 A

TECHNICAL DATA

Rated voltage:	250 V	Lockable:	No
Rated current:	2.5 A	Additional technical data, see facts & data.	
Degree of protection (IP):	IP20		

connecting cable, female - male

		Length (m)	H03VVH2-F halogenated Art.No.	H03V2V2H2-F halogenated Art.No.	H03Z1Z1H2-F halogen free Art.No.
Cable color:			☐ white	☐ white	☐ white
Color of coding:	☐ white	1	90.230.1010.2	90.230.1020.2	90.230.1040.2
Application:	protection class II 250 V	3	90.230.3010.2	90.230.3020.2	90.230.3040.2
Marking of poles:					
Cable color:			☐ white	☐ white	☐ white
Color of coding:	■ green	1	90.210.1010.2*	90.210.1020.2*	
Application:	SELV	2	90.210.2010.2*	90.210.2020.2*	
Marking of poles:	+, -	2.5	90.210.2510.2*	90.210.2520.2*	
		3	90.210.3010.2*	90.210.3020.2*	90.210.3040.2*
		4	90.210.4010.2*	90.210.4020.2*	
		5	90.210.5010.2*	90.210.5020.2*	
Cable color:			☐ white	☐ white	
Color of coding:	■ light blue	1	90.200.1010.2*	90.200.1020.2*	
Application:	SELV	3	90.200.3010.2*	90.200.3020.2*	
Marking of poles:					
Cable color:			☐ white	☐ white	
Color of coding:	■ yellow	1		90.220.1020.2*	
Application:	SELV serial	3	90.220.3010.2*	90.220.3020.2*	
Marking of poles:	+, -				

TECHNICAL DATA

Rated voltage:	250 V	Lockable:	No
Rated current:	2.5 A	Preparation of conductor ends:	cable end sleeve without insulating shroud
Degree of protection (IP):	IP20	Additional technical data, see facts & data.	

connection cable, female - free end

		Length (m)	H03VVH2-F halogenated Art.No.	H03V2V2H2-F halogenated Art.No.	H03Z1Z1H2-F halogen free Art.No.
Cable color:			☐ white	☐ white	
Color of coding:	☐ white	0.5	90.230.0513.2	90.230.0523.2	
Application:	protection class II 250 V				
Marking of poles:					
Cable color:			☐ white	☐ white	☐ white
Color of coding:	■ green	0.15		99.415.0000.8*	
Application:	SELV	0.3	90.210.0313.2*	90.210.0323.2*	
Marking of poles:	+, -	0.5	90.210.0513.2*	90.210.0523.2*	90.210.0543.2*
		1		90.210.1023.2*	
		2	90.210.2013.2*	90.210.2023.2*	
		3	90.210.3013.2*	90.210.3023.2*	
		4	90.210.4013.2*		
		5	90.210.5013.2*	90.210.5023.2*	
Cable color:			☐ white	☐ white	
Color of coding:	■ light blue	0.5	90.200.0513.2*	90.200.0523.2*	
Application:	SELV	3		90.200.3023.2*	
Marking of poles:					
Cable color:				☐ white	
Color of coding:	■ yellow	0.5		90.220.0523.2*	
Application:	SELV serial				
Marking of poles:	+, -				

*) Alternative technical data, see facts & data.

Technical changes reserved

GST08I2, CABLE ASSEMBLY, 2-POLE

0.75 mm², 2.5 A

TECHNICAL DATA

Rated voltage:	250 V	Lockable:	No
Rated current:	2.5 A	Preparation of conductor ends:	cable end sleeve without insulating shroud
Degree of protection (IP):	IP20		

Additional technical data, see facts & data.

connection cable, male - free end

		Length (m)	H03VVH2-F halogenated Art.No.	H03V2V2H2-F halogenated Art.No.	H03Z1Z1H2-F halogen free Art.No.
Cable color:			☐ white	☐ white	☐ white
Color of coding:	☐ white	0.5	90.230.0514.2	90.230.0524.2	90.230.0544.2
Application:	protection class II 250 V	2	90.230.2014.2	90.230.2024.2	
Marking of poles:	L, N				
Cable color:			☐ white	☐ white	☐ white
Color of coding:	■ green	0.15		99.428.0000.8*	
Application:	SELV	0.5	90.210.0514.2*	90.210.0524.2*	90.210.0544.2*
Marking of poles:	+, -	1	90.210.1014.2*	90.210.1024.2*	
		2.5	90.210.2514.2*	90.210.2524.2*	
		3		90.210.0324.2*	
		5	90.210.5014.2*	90.210.5024.2*	
Cable color:			☐ white	☐ white	
Color of coding:	■ light blue	0.5	90.200.0514.2*	90.200.0524.2*	
Application:	SELV	1		90.200.1024.2*	
Marking of poles:					
Cable color:				☐ white	
Color of coding:	■ yellow	0.5		90.220.0524.2*	
Application:	SELV serial				
Marking of poles:	+, -				

TECHNICAL DATA

Rated voltage:	250 V	Lockable:	No
Rated current:	2.5 A		
Degree of protection (IP):	IP20		

Additional technical data, see facts & data.

adapter cable, GST15i2 male - GST08i2 female

		Length (m)	H03V2V2H2-F halogenated Art.No.
Cable color:			☐ white
Color of coding:	☐ white	0.5	90.230.0525.2
Application:	protection class II 250 V		
Marking of poles:			
Cable color:			☐ white
Color of coding:	■ green	0.5	90.210.0525.2*
Application:	SELV		
Marking of poles:			
Cable color:			☐ white
Color of coding:	■ light blue	0.5	90.200.0525.2*
Application:	SELV		
Marking of poles:			

*) Alternative technical data, see facts & data.

GST08I2, ACCESSORIES

mounting part, housing installation frame for female connector for flying leads GST08i2

Color	Art.No.
☐ white	99.450.0000.8

cover cap

Color	Art.No.
☐ white	06.562.3100.0

sealing grommet, IP44

Color	Art.No.
Natural color	06.562.3200.0

Technical changes reserved

GST08I3, DISTRIBUTOR, 3-POLE

TECHNICAL DATA			
Rated voltage:	250 V	Lockable:	No
Rated current:	6 A	Additional technical data, see facts & data.	
Degree of protection (IP):	IP20		

sixfold distributor, input GST08

Color of coding	Application	Length (m)	Art.No.
☐ white	mains 250 V	0,5 m	90.240.0506.2

Technical changes reserved

GST08I3, CABLE ASSEMBLY, 3-POLE

0.75 mm², 6 A

TECHNICAL DATA

Rated voltage:	250 V	Lockable:	No
Rated current:	6 A	Additional technical data, see facts & data.	
Degree of protection (IP):	IP20		

connecting cable, female - male

H03VV-F
halogenated

Cable color: ☐ white
Color of coding: ☐ white
Application: mains 250 V
Marking of poles:

Length (m)	Art.No.
1	90.240.1000.2
3	90.240.3000.2

TECHNICAL DATA

Rated voltage:	250 V	Lockable:	No
Rated current:	6 A	Preparation of conductor ends:	cable end sleeve without insulating shroud
Degree of protection (IP):	IP20	Additional technical data, see facts & data.	

connection cable, female - free end

H03VV-F
halogenated

Cable color: ☐ white
Color of coding: ☐ white
Application: mains 250 V
Marking of poles:

Length (m)	Art.No.
0.5	90.240.0503.2

GST08I3, CABLE ASSEMBLY, 3-POLE

0.75 mm², 6 A

TECHNICAL DATA

Rated voltage:	250 V	Lockable:	No
Rated current:	6 A	Preparation of conductor ends:	cable end sleeve without insulating shroud
Degree of protection (IP):	IP20		

Additional technical data, see facts & data.

connection cable, male - free end

H03VV-F halogenated

Cable color: ☐ white
Color of coding: ☐ white
Application: mains 250 V
Marking of poles:

Length (m)	Art.No.
0.5	90.240.0504.2

TECHNICAL DATA

Rated voltage:	250 V	Lockable:	No
Rated current:	6 A		
Degree of protection (IP):	IP20		

Additional technical data, see facts & data.

adapter cable, GST15i3 male – GST08i3 female

H03VV-F halogenated

Cable color: ☐ white
Color of coding: ☐ white
Application: mains 250 V
Marking of poles:

Length (m)	Art.No.
0.5	90.240.0505.2

Technical changes reserved

GST08I3, ACCESSORIES

mounting part, housing installation frame for female connector for flying leads GST08i3

Color	Art.No.
☐ white	99.451.0000.8

GESIS® NV LOW-VOLTAGE TECHNOLOGY

This is the connector system for quick, easy, and safe bus cabling and signal applications. It meets all the requirements of modern building installation.

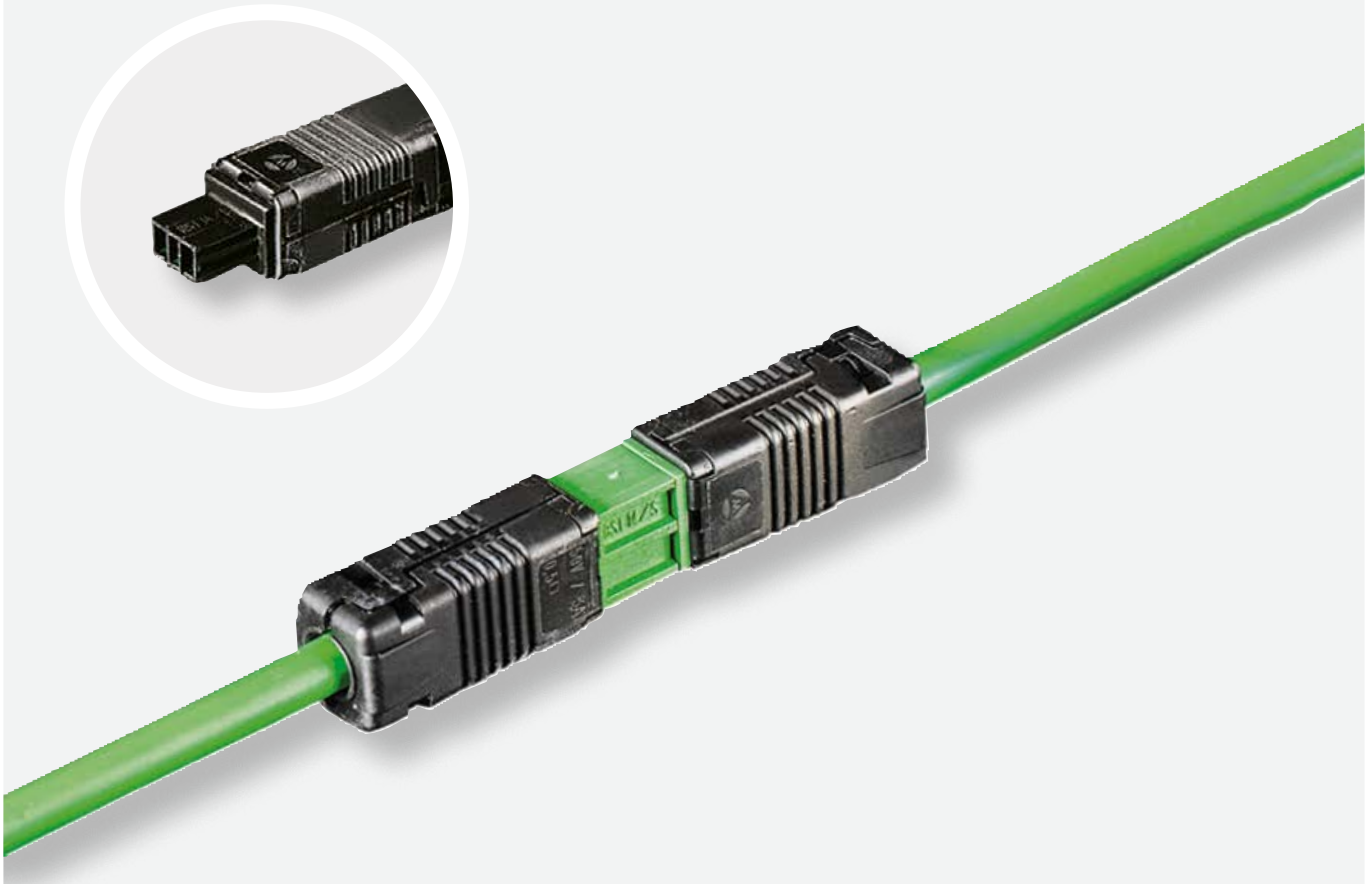

FEATURES

+ These connectors are used to distribute SELV signals inside buildings, in parallel to the distribution of energy
+ Complex installations can be completed with just four basic components – from the sub-distributor to any point of use
+ Design as per KNX manual

GESIS® NV COMPONENTS

DISTRIBUTORS AND PLUG CONNECTORS

- Quick and tool-free field connection of plug connectors provides high-level flexibility
- Wide choice of distributors in a huge variety of designs enables signals to be distributed in parallel to energy
  + Transparent installation
  + Safe separation of energy and SELV signals
- System-compliant distribution of data as per KNX manual

DEVICE CONNECTORS

- Used to integrate the equipment (e.g. room controller or luminaire) into the data infrastructure:
  + Solder connectors can be integrated directly on the PC board
  + Snap-ins with spring clamp connection form the interface to the equipment in the housing cut-out

CABLE ASSEMBLIES

- Industrially prefabricated cables allow high-speed cabling
  + KNX-certified cables are used for the KNX application
  + Other cable types are available for other applications

BST14I2, CONNECTOR, 2-POLE

SPRING CLAMP CONNECTION

TECHNICAL DATA

Rated voltage:	50 V	Lockable:	self-locking (unlocking by hand)
Rated current:	3 A	Connection cross section solid:	0,25 mm² - 0,75 mm²
Degree of protection (IP):	IP20		
Terminations per pole:	1		

Additional technical data, see facts & data.

female **male**

for cables Ø 5.5-6.5 mm

Color of coding	Application	Marking of poles	female Art.No.	male Art.No.
green	SELV (KNX)	1+, 2-	93.421.0553.1	93.422.0553.1
pastel blue	SELV	1+, 2-	93.421.4553.1	93.422.4553.1

Technical changes reserved

BST14I2, DEVICE CONNECTOR, 2-POLE

SPRING CLAMP CONNECTION

TECHNICAL DATA

Rated voltage:	50 V	Lockable:	self-locking (unlocking by hand)
Rated current:	3 A	Connection cross section solid:	0,25 mm² - 0,75 mm²
Degree of protection (IP):	IP20		
Terminations per pole:	1		

Additional technical data, see facts & data.

female **male**

snap-in, housing material thickness 0.5-1.5 mm			female	male
Color of coding	**Application**	**Marking of poles**	**Art.No.**	**Art.No.**
green	SELV (KNX)	1+, 2-	93.421.0353.1	93.422.0353.1
pastel blue	SELV	1+, 2-	93.421.4353.1	93.422.4353.1

SOLDERING CONNECTION

TECHNICAL DATA

Rated voltage:	50 V	Terminations per pole:	1
Rated current:	3 A	Lockable:	self-locking (unlocking by hand)
Degree of protection (IP):	IP20		

Additional technical data, see facts & data.

female **male**

solder connector, horizontal, without fastening flange			female	male
Color of coding	**Application**	**Marking of poles**	**Art.No.**	**Art.No.**
green	SELV (KNX)	1+, 2-	93.421.0653.1	93.422.0653.1
pastel blue	SELV	1+, 2-	93.421.4653.1	93.422.4653.1

BST14I2, DISTRIBUTOR, 2-POLE

TECHNICAL DATA			
Rated voltage:	50 V	Lockable:	self-locking (unlocking by hand)
Rated current:	3 A		
Degree of protection (IP):	IP20	Additional technical data, see facts & data.	

H-distributor, without fastening option

Color of coding	Application	Marking of poles	Art.No.
green	SELV (KNX)	1+, 2-	93.420.0453.0

HH-distributor, without fastening option

Color of coding	Application	Marking of poles	Art.No.
green	SELV (KNX)	1+, 2-	93.420.0053.0

T-distributor, without fastening option

Color of coding	Application	Marking of poles	Art.No.
green	SELV (KNX)	1+, 2-	93.420.0653.0
pastel blue	SELV	1+, 2-	93.420.4653.0

T-distributor, without fastening option

Color of coding	Application	Art.No.
pastel blue	SELV	93.420.4553.0

Technical changes reserved

BST14I2, CABLE ASSEMBLY, 2-POLE

0.5 mm², 3 A

TECHNICAL DATA

Rated voltage:	50 V	Lockable:	self-locking (unlocking by hand)
Rated current:	3 A		
Degree of protection (IP):	IP20	Additional technical data, see facts & data.	

connecting cable, female - male

			J-H(St)Hh 2x2x0,8 halogen free Cca s1 d1 a1	FB-2Y(ST)Y 2x2x0,8 halogenated Eca	FB-H(ST) 2x2x0,8 halogen free Dca
		Length (m)	**Art.No.**	**Art.No.**	**Art.No.**
Cable color:			green	green	green
Color of coding:	green	1	94.425.1050.7	94.425.1000.7	94.425.1060.7
Application:	SELV (KNX)	2	94.425.2050.7	94.425.2000.7	94.425.2060.7
Marking of poles:	1+, 2-	3	94.425.3050.7	94.425.3000.7	94.425.3060.7
		4	94.425.4050.7	94.425.4000.7	94.425.4060.7
		5	94.425.5050.7	94.425.5000.7	94.425.5060.7
		6	94.425.6050.7	94.425.6000.7	94.425.6060.7
		7	94.425.7050.7	94.425.7000.7	94.425.7060.7
		8	94.425.8050.7	94.425.8000.7	94.425.8060.7
Cable color:				Grey	green
Color of coding:	pastel blue	1		94.425.1000.9	
Application:	SELV	2		94.425.2000.9	
Marking of poles:	1+, 2-	3		94.425.3000.9	94.425.3060.9
		4		94.425.4000.9	
		5		94.425.5000.9	94.425.5060.9
		6		94.425.6000.9	
		7		94.425.7000.9	
		8		94.425.8000.9	

connecting cable, female - male

			L03VV-U halogenated Eca	L03Z1Z1-U halogen free Eca
		Length (m)	**Art.No.**	**Art.No.**
Cable color:				
Color of coding:	green	1		
Application:	SELV (KNX)	2		
Marking of poles:	1+, 2-	3		
		4		
		5		
		6		
		7		
		8		
Cable color:			black	black
Color of coding:	pastel blue	1	94.425.1030.9	94.425.1090.9
Application:	SELV	2	94.425.2030.9	94.425.2090.9
Marking of poles:	1+, 2-	3	94.425.3030.9	94.425.3090.9
		4	94.425.4030.9	94.425.4090.9
		5	94.425.5030.9	94.425.5090.9
		6	94.425.6030.9	94.425.6090.9
		7	94.425.7030.9	94.425.7090.9
		8	94.425.8030.9	94.425.8090.9

BST14I2, CABLE ASSEMBLY, 2-POLE

0.5 mm², 3 A

TECHNICAL DATA

Rated voltage:	50 V	Lockable:	self-locking (unlocking by hand)
Rated current:	3 A		
Degree of protection (IP):	IP20	Preparation of conductor ends:	stripped

Additional technical data, see facts & data.

connection cable, female - free end

			J-H(St)Hh 2x2x0,8 halogen free Cca s1 d1 a1	FB-2Y(ST)Y 2x2x0,8 halogenated Eca	FB-H(ST) 2x2x0,8 halogen free Dca
		Length (m)	**Art.No.**	**Art.No.**	**Art.No.**
Cable color:			green	green	green
Color of coding:	green	1	94.425.1053.7	94.425.1003.7	94.425.1063.7
Application:	SELV (KNX)	2	94.425.2053.7	94.425.2003.7	94.425.2063.7
Marking of poles:	1+, 2-	3	94.425.3053.7	94.425.3003.7	94.425.3063.7
		4	94.425.4053.7	94.425.4003.7	94.425.4063.7
		5	94.425.5053.7	94.425.5003.7	94.425.5063.7
		6	94.425.6053.7	94.425.6003.7	94.425.6063.7
		7	94.425.7053.7	94.425.7003.7	94.425.7063.7
		8	94.425.8053.7	94.425.8003.7	94.425.8063.7
Cable color:				Grey	green
Color of coding:	pastel blue	1		94.425.1003.9	
Application:	SELV	2		94.425.2003.9	
Marking of poles:	1+, 2-	3		94.425.3003.9	94.425.3063.9
		4		94.425.4003.9	
		5		94.425.5003.9	
		6		94.425.6003.9	
		7		94.425.7003.9	
		8		94.425.8003.9	

connection cable, female - free end

			L03VV-U halogenated Eca	L03Z1Z1-U halogen free Eca
		Length (m)	**Art.No.**	**Art.No.**
Cable color:				
Color of coding:	green	1		
Application:	SELV (KNX)	2		
Marking of poles:	1+, 2-	3		
		4		
		5		
		6		
		7		
		8		
Cable color:			black	black
Color of coding:	pastel blue	1	94.425.1033.9	94.425.1093.9
Application:	SELV	2	94.425.2033.9	94.425.2093.9
Marking of poles:	1+, 2-	3	94.425.3033.9	94.425.3093.9
		4	94.425.4033.9	
		5	94.425.5033.9	94.425.5093.9
		6	94.425.6033.9	94.425.6093.9
		7		94.425.7093.9
		8	94.425.8033.9	94.425.8093.9

Technical changes reserved

BST14I2, CABLE ASSEMBLY, 2-POLE

0.5 mm², 3 A

TECHNICAL DATA

Rated voltage:	50 V	Lockable:	self-locking (unlocking by hand)
Rated current:	3 A		
Degree of protection (IP):	IP20	Preparation of conductor ends:	stripped

Additional technical data, see facts & data.

connection cable, male - free end

Cable color:
Color of coding: green
Application: SELV (KNX)
Marking of poles: 1+, 2-

Length (m)	J-H(St)Hh 2x2x0,8 halogen free Cca s1 d1 a1 Art.No.	FB-2Y(ST)Y 2x2x0,8 halogenated Eca Art.No.	FB-H(ST) 2x2x0,8 halogen free Dca Art.No.
	green	green	green
1	94.425.1054.7	94.425.1004.7	94.425.1064.7
2	94.425.2054.7	94.425.2004.7	94.425.2064.7
3	94.425.3054.7	94.425.3004.7	94.425.3064.7
4	94.425.4054.7	94.425.4004.7	94.425.4064.7
5	94.425.5054.7	94.425.5004.7	94.425.5064.7
6	94.425.6054.7	94.425.6004.7	94.425.6064.7
7	94.425.7054.7	94.425.7004.7	94.425.7064.7
8	94.425.8054.7	94.425.8004.7	94.425.8064.7

Cable color:
Color of coding: pastel blue
Application: SELV
Marking of poles: 1+, 2-

		Grey	
1		94.425.1004.9	
2		94.425.2004.9	
3		94.425.3004.9	
4		94.425.4004.9	
5		94.425.5004.9	
6			
7			
8			

connection cable, male - free end

Cable color:
Color of coding: green
Application: SELV (KNX)
Marking of poles: 1+, 2-

Length (m)	L03VV-U halogenated Eca Art.No.	L03Z1Z1-U halogen free Eca Art.No.
1		
2		
3		
4		
5		
6		
7		
8		

Cable color:
Color of coding: pastel blue
Application: SELV
Marking of poles: 1+, 2-

	black	black
1	94.425.1034.9	94.425.1094.9
2	94.425.2034.9	94.425.2094.9
3	94.425.3034.9	94.425.3094.9
4	94.425.4034.9	94.425.4094.9
5	94.425.5034.9	94.425.5094.9
6	94.425.6034.9	94.425.6094.9
7	94.425.7034.9	94.425.7094.9
8	94.425.8034.9	94.425.8094.9

BST14I3, CONNECTOR, 3-POLE

SPRING CLAMP CONNECTION

TECHNICAL DATA

Rated voltage:	50 V	Lockable:	self-locking (unlocking by hand)
Rated current:	3 A	Connection cross section solid:	0,25 mm² - 0,75 mm²
Degree of protection (IP):	IP20		
Terminations per pole:	1		

Additional technical data, see facts & data.

female **male**

for cables Ø 5.5-6.5 mm

Color of coding	Application	Marking of poles	female Art.No.	male Art.No.
■ black	SELV	1+, 2-	93.431.2553.1	93.432.2553.1
□ white	SELV	1+, 2-	93.431.2553.0	93.432.2553.0

Technical changes reserved

BST14I3, DEVICE CONNECTOR, 3-POLE

SPRING CLAMP CONNECTION

TECHNICAL DATA

Rated voltage:	50 V	Lockable:	self-locking (unlocking by hand)
Rated current:	3 A	Connection cross section solid:	0,25 mm² - 0,75 mm²
Degree of protection (IP):	IP20		
Terminations per pole:	1		

Additional technical data, see facts & data.

female **male**

snap-in, housing material thickness 0.5-1.5 mm			female	male
Color of coding	**Application**	**Marking of poles**	**Art.No.**	**Art.No.**
■ black	SELV	1+, 2-	93.431.2353.1	93.432.2353.1
□ white	SELV	1+, 2-	93.431.2353.0	93.432.2353.0

SOLDERING CONNECTION

TECHNICAL DATA

Rated voltage:	50 V	Terminations per pole:	1
Rated current:	3 A	Lockable:	self-locking (unlocking by hand)
Degree of protection (IP):	IP20		

Additional technical data, see facts & data.

female **male**

solder connector, horizontal, without fastening flange			female	male
Color of coding	**Application**	**Marking of poles**	**Art.No.**	**Art.No.**
■ black	SELV	1+, 2-	93.431.2653.1	93.432.2653.1
□ white	SELV	1+, 2-	93.431.2653.0	93.432.2653.0

BST14I3, DISTRIBUTOR, 3-POLE

TECHNICAL DATA			
Rated voltage:	50 V	Lockable:	self-locking (unlocking by hand)
Rated current:	3 A		
Degree of protection (IP):	IP20	Additional technical data, see facts & data.	

H-distributor, without fastening option

Color of coding	Application	Marking of poles	Art.No.
■ black	SELV	1+, 2-	93.430.2453.1
□ white	SELV	1+, 2-	93.430.2453.0

HH-distributor, without fastening option

Color of coding	Application	Marking of poles	Art.No.
■ black	SELV	1+, 2-	93.430.2053.1
□ white	SELV	1+, 2-	93.430.2053.0

T-distributor, without fastening option

Color of coding	Application	Marking of poles	Art.No.
■ black	SELV	1+, 2-	93.430.2653.1
□ white	SELV	1+, 2-	93.430.2653.0

Technical changes reserved

BST14I3, CABLE ASSEMBLY, 3-POLE

0.5 mm², 3 A

TECHNICAL DATA

Rated voltage:	50 V	Lockable:	self-locking (unlocking by hand)
Rated current:	3 A		
Degree of protection (IP):	IP20	Additional technical data, see facts & data.	

connecting cable, female - male

Cable color:
Color of coding: ■ black
Application: SELV
Marking of poles: 1+, 2-

Length (m)	FB-2Y(ST)Y 2x2x0,8 halogenated Eca Art.No.	FB-H(ST) 2x2x0,8 halogen free Dca Art.No.
	■ Grey	■ green
1	94.435.1000.1	94.435.1060.1
2	94.435.2000.1	94.435.2060.1
3	94.435.3000.1	94.435.3060.1
4	94.435.4000.1	94.435.4060.1
5	94.435.5000.1	94.435.5060.1
6	94.435.6000.1	94.435.6060.1
7	94.435.7000.1	94.435.7060.1
8	94.435.8000.1	94.435.8060.1

TECHNICAL DATA

Rated voltage:	50 V	Lockable:	self-locking (unlocking by hand)
Rated current:	3 A		
Degree of protection (IP):	IP20	Preparation of conductor ends:	stripped
		Additional technical data, see facts & data.	

connection cable, female - free end

Cable color:
Color of coding: ■ black
Application: SELV
Marking of poles: 1+, 2-

Length (m)	FB-2Y(ST)Y 2x2x0,8 halogenated Eca Art.No.
	■ Grey
1	94.435.1003.1
2	94.435.2003.1
3	94.435.3003.1
4	94.435.4003.1
5	94.435.5003.1
6	94.435.6003.1
8	94.435.8003.1

BST14I3, CABLE ASSEMBLY, 3-POLE

0.5 mm², 3 A

TECHNICAL DATA

Rated voltage:	50 V	Lockable:	self-locking (unlocking by hand)
Rated current:	3 A		
Degree of protection (IP):	IP20	Preparation of conductor ends:	stripped

Additional technical data, see facts & data.

connection cable, male - free end

Cable color:
Color of coding: ■ black
Application: SELV
Marking of poles: 1+, 2-

Length (m)	FB-2Y(ST)Y 2x2x0,8 halogenated Eca Art.No.	FB-H(ST) 2x2x0,8 halogen free Dca Art.No.
	■ Grey	■ green
1	94.435.1004.1	94.435.1064.1
2	94.435.2004.1	94.435.2064.1
3	94.435.3004.1	94.435.3064.1
4	94.435.4004.1	94.435.4064.1
5	94.435.5004.1	
6	94.435.6004.1	94.435.6064.1
7	94.435.7004.1	
8	94.435.8004.1	94.435.8064.1

Technical changes reserved

BST14, ACCESSORIES

cover cap, BST14, for female connectors

Color	Art.No.
■ black	05.563.7753.0

cover cap, BST14, for male connectors

Color	Art.No.
■ black	05.563.7853.0

cover cap, BST14i, for snap-in cut out

Color	Art.No.
□ white	07.425.8453.0

GESIS® NRG THE FLEXIBLE BUSBAR

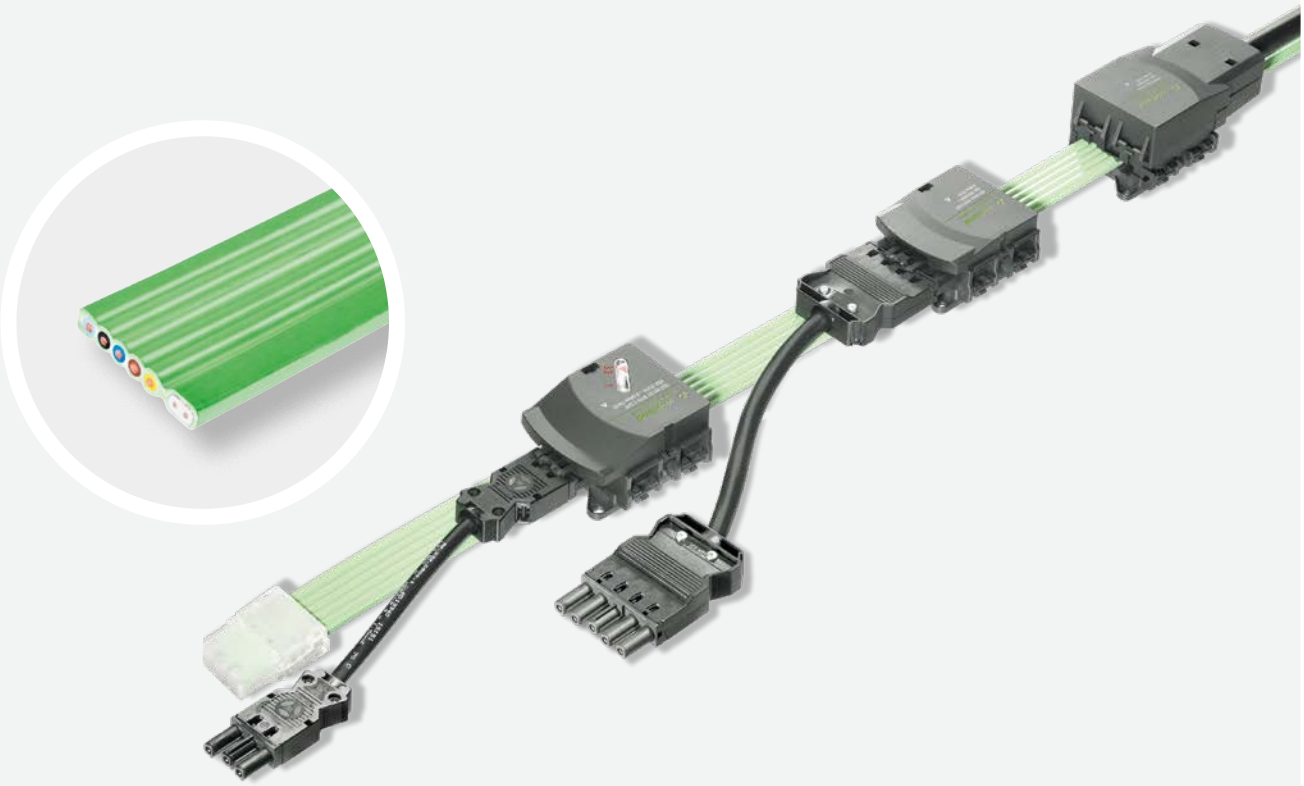

MODULARITY

All 2.5 / 4 mm² cables with or without bus in the same design enable a wide variety of applications to be mapped with just a few adapters, which results in clear parts lists.

FLEXIBILITY

Adapters can be placed anywhere at any time, which reduces the amount of planning and increases flexibility.

LOW SPACE REQUIREMENT

All adapters feature round cables and slots in parallel to the flat cable, saving installation space.

CONSISTENCY

All output adapters are pluggable, with identical rated values to the connector (GST18®, GST15, BST14), enabling the entire electrical installation to be mapped.

GESIS® NRG HIGHLIGHTS

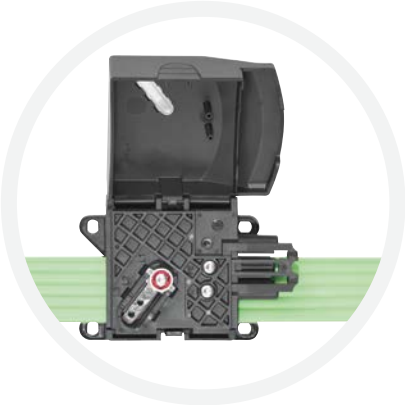

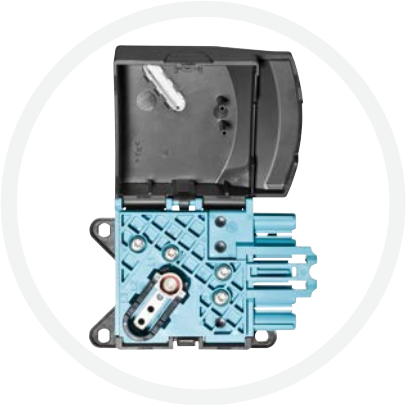

ADJUSTABLE PHASE PRE-SELECTION FOR GST18i3

Before contacting, the phase for the supply of the 3-pole GST18i3 output can be selected with a phase selector. And it is still possible to change the phase subsequently: Just loosen the contact screw, push the slider to the new position and make a new contact. The adapter does not need to be moved – a significant advantage of the system.

ADJUSTABLE PHASE PRE-SELECTION FOR GST18i5

By analogy with the phase pre-selection for the GST18i3, the phases to be tapped can also be chosen and changed afterwards by using the 5+2 cable for mains + non-SELV (e.g. DALI) and the GST18i5 pastel blue combi-adapter.

INSPECTION WINDOW FOR PHASE SELECTION

The transparent inspection window lets you check which one of the three phases is connected to the GST18® cable even when the lid is closed.

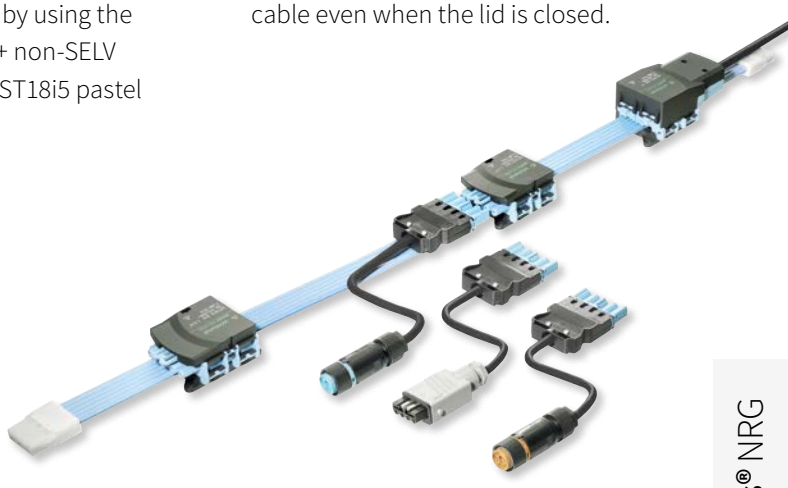

INTEGRATED INTERLOCKING DEVICE

The interlocking device is included in every output adapter, as is the case with the GST18® H distributors, for example. This ensures a safe connection at all times without the need to order an extra interlock.

INCREASED SAFETY

The safety closure integrated in the adapter ensures that the lid can only be closed if the screws are completely screwed in. Complete contacting is assured through compliance with the rated torque.

MOUNTING OPTION IN BOTTOM PART

The bottom part is provided with four mounting holes for mounting the components on walls, ceilings, or cable ducts.

NRG, FLAT CABLE

5G2,5/4

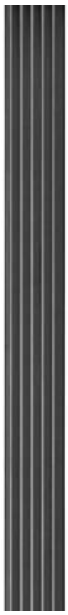

TECHNICAL DATA			
Rated voltage:	600 V / 1.000 V	Additional technical data, see facts & data.	
Rated current:	20 A		

5G2,5 mm²

Cable color	Application	PVC halogenated Eca Art.No.	halogen free B2ca s1 d1 a1 Art.No.	halogen free Eca Art.No.
black	mains 250/400 V	00.712.0303.1	00.770.0303.1	00.710.0303.1
green	mains 250/400 V	00.712.0303.7	00.770.0303.7	00.710.0303.7
pastel blue	mains 250 V + not SELV	00.712.0303.6	00.770.0303.6	00.710.0303.6

5G4 mm²

Cable color	Application	halogen free B2ca s1 d1 a1 Art.No.	halogen free Eca Art.No.
black	mains 250/400 V	00.770.0304.1	00.710.0304.1
green	mains 250/400 V	00.770.0304.7	00.710.0304.7
pastel blue	mains 250 V + not SELV		00.710.0304.6

5G2.5/4+2X1,5 WITH SHIELD

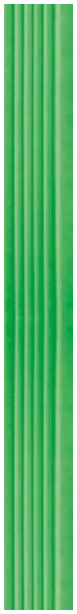

TECHNICAL DATA			
Rated voltage:	600 V / 1.000 V	Rated current bus:	3 A
Rated voltage bus:	50 V	Additional technical data, see facts & data.	
Rated current:	20 A		

5G2,5 mm² + 2X1,5 mm²

Cable color	Application	PVC halogenated Eca Art.No.	halogen free B2ca s1 d1 a1 Art.No.	halogen free Eca Art.No.
green	mains 250/400 V + SELV	00.712.0323.7	00.770.0323.7	00.710.0323.7

5G4 mm² + 2X1,5 mm²

Cable color	Application	halogen free B2ca s1 d1 a1 Art.No.	halogen free Eca Art.No.
green	mains 250/400 V + SELV	00.770.0324.7	00.710.0324.7

Technical changes reserved

NRG, FLAT CABLE

5G2,5/4+2X1,5 WITHOUT SHIELD

TECHNICAL DATA			
Rated voltage:	600 V / 1.000 V	Rated current bus:	6 A
Rated voltage bus:	250 V	Additional technical data, see facts & data.	
Rated current:	20 A		

5G2,5 mm² + 2X1,5 mm²

Cable color	Application	PVC halogenated Eca Art.No.	halogen free B2ca s1 d1 a1 Art.No.	halogen free Eca Art.No.
■ black	mains 250/400 V + not SELV	00.712.1323.1	00.770.1323.1	00.710.1323.1

5G4 mm² + 2X1,5 mm²

Cable color	Application	halogen free B2ca s1 d1 a1 Art.No.	halogen free Eca Art.No.
■ black	mains 250/400 V + not SELV	00.770.1324.1	00.710.1324.1

5G10

TECHNICAL DATA		
Rated voltage:	600 V / 1.000 V	Additional technical data, see facts & data.
Rated current:	50 A	

5G10 mm²

Cable color	Application	PVC halogenated Eca Art.No.	Polyolefincompound halogen free B2ca s1 d1 a1 Art.No.	Polyolefincompound halogen free Eca Art.No.
Light green	mains 250/400 V	00.702.0306.7	00.770.0306.7	00.709.0306.7

NRG, FLAT CABLE ADAPTER

TECHNICAL DATA

Rated current:	20 A	Cross section fine-stranded:	2,5 mm² - 4 mm²
Degree of protection (IP):	IP20	Connection cross section solid:	2,5 mm² - 6 mm²
Lockable:	self-locking (unlocking by tool)	Additional technical data, see facts & data.	

5G2,5/4, for round cables 12…16 mm

Color of coding	Application	Marking of poles	Art.No.
■ black	mains 250/400 V	L3, L2, PE, N, L1	92.050.1553.1
■ pastel blue	mains 250 V + not SELV	D1, D2, L, PE, N	92.050.1653.0

TECHNICAL DATA

Rated current:	20 A	Lockable:	self-locking (unlocking by tool)
Degree of protection (IP):	IP20	Additional technical data, see facts & data.	

5G2,5/4, with phase choice, pluggable with GST18i3

Color of coding	Application	Marking of poles	Art.No.
■ black	mains 250 V	L, N, PE	92.031.5453.1

TECHNICAL DATA

Rated current:	20 A	Lockable:	self-locking (unlocking by tool)
Degree of protection (IP):	IP20	Additional technical data, see facts & data.	

5G2,5/4, pluggable with GST18i5

Color of coding	Application	Marking of poles	Art.No.
■ black	mains 250/400 V	L3, L2, PE, N, L1	92.051.5453.1
■ pastel blue	mains 250 V + not SELV	D1, D2, L, PE, N	92.051.5553.0

TECHNICAL DATA

Rated current:	3 A	Cross section fine-stranded:	0,5 mm² - 1,5 mm²
Degree of protection (IP):	IP20	Connection cross section solid:	0,5 mm² - 1,5 mm²
Lockable:	self-locking (unlocking by tool)	Additional technical data, see facts & data.	

5G2.5/4+2X1,5 with shield, for round cables 5,9...7,5 mm

Color of coding	Application	Marking of poles	Art.No.
■ green	SELV (KNX)	1+, 2-	93.420.5453.0

Technical changes reserved

NRG, FLAT CABLE ADAPTER

TECHNICAL DATA			
Rated current:	3 A	Lockable:	self-locking (unlocking by hand)
Degree of protection (IP):	IP20		
		Additional technical data, see facts & data.	

5G2.5/4+2X1,5 with shield, pluggable with BST14i2

Color of coding	Application	Marking of poles	Art.No.
green	SELV (KNX)	1+, 2-	93.421.5453.0

TECHNICAL DATA			
Rated current:	6 A	Cross section fine-stranded:	0,5 mm² - 1,5 mm²
Degree of protection (IP):	IP20		
Lockable:	self-locking (unlocking by tool)	Connection cross section solid:	0,5 mm² - 1,5 mm²
		Additional technical data, see facts & data.	

5G2,5/4+2X1,5 without shield, for round cables 5,9...7,5 mm

Color of coding	Application	Marking of poles	Art.No.
pastel blue	not SELV	D1, D2	91.020.5453.0

TECHNICAL DATA			
Rated current:	6 A	Lockable:	self-locking (unlocking by tool)
Degree of protection (IP):	IP20		
		Additional technical data, see facts & data.	

5G2,5/4+2X1,5 without shield, pluggable with GST15i2

Color of coding	Application	Marking of poles	Art.No.
pastel blue	not SELV	D1, D2	91.021.5453.0

TECHNICAL DATA			
Rated current:	20 A	Lockable:	self-locking (unlocking by tool)
Degree of protection (IP):	IP20		
		Additional technical data, see facts & data.	

5G2,5/4+2X1,5 without shield, with phase choice, pluggable with GST18i5

Color of coding	Application	Marking of poles	Art.No.
pastel blue	mains 250 V + not SELV	L, N, PE, D1, D2	92.051.5653.0

NRG, FLAT CABLE ADAPTER

TECHNICAL DATA			
Rated current:	50 A	Cross section fine-stranded:	10 mm² - 16 mm²
Degree of protection (IP):	IP20	Connection cross section solid:	10 mm² - 16 mm²
Lockable:	self-locking (unlocking by tool)	Additional technical data, see facts & data.	

5G10, screw-on cover M32

Application	Marking of poles	Art.No.
mains 250/400 V	1, 2, 3, N, PE	92.050.9053.0

TECHNICAL DATA			
Rated current:	50 A	Lockable:	self-locking (unlocking by tool)
Degree of protection (IP):	IP20	Additional technical data, see facts & data.	

5G10, screw-on cover M40

Application	Marking of poles	Art.No.
mains 250/400 V	L3, L2, PE, N, L1	92.050.8853.0

TECHNICAL DATA			
Rated current:	32 A	Cross section fine-stranded:	2,5 mm² - 6 mm²
Degree of protection (IP):	IP20	Connection cross section solid:	2,5 mm² - 6 mm²
Lockable:	self-locking (unlocking by tool)	Additional technical data, see facts & data.	

5G10, for round cables 9.7...18 mm

Application	Marking of poles	Art.No.
mains 250/400 V	L3, L2, PE, N, L1	92.050.9153.0

Technical changes reserved

NRG, ACCESSORIES

tool, screwdriver bit TX10x50

Color	Art.No.
Grey	06.502.5910.0

tool, screwdriver TX10

Color	Art.No.
Grey	06.502.6000.0

tool, screwdriver bit TX10x25

Color	Art.No.
Grey	06.502.5810.0

cable cutter, for 5G2,5/4 and 5+2

Color	Art.No.
Grey	95.300.0600.0

end cap, for 5G2,5/4

Color	Application	Art.No.
Natural color	mains 250/400 V	06.562.0653.0

end cap, for 5G2,5/4, with silicone containing gel

Color	Application	Art.No.
Natural color	mains 250/400 V	06.564.1753.0

end cap, for up to 50 V on the bus cable

Color	Application	Art.No.
Natural color	mains 250/400 V + SELV	06.562.4353.0

NRG, ACCESSORIES

end cap, for up to 250 V on the bus cable, with silicone containing gel

Color	Application	Art.No.
Natural color	mains 250/400 V + not SELV	06.562.9753.0

end cap, for 5G10

Color	Application	Art.No.
Natural color	mains 250/400 V	05.563.9553.0

cable patch, for flat cables 5G2,5/4/10 and 5+2

Color	Art.No.
■ black	Z6.563.5700.0

Technical changes reserved

COUNTRY-SPECIFIC PRODUCTS
UNITED KINGDOM

GST18i3	Distributors, distribution boxes, cable assemblies	**156**
GST18i4	Distributors, distribution boxes, cable assemblies	**162**
GST18i5	Distributors, distribution boxes, cable assemblies	**172**
GST18i6	Distributors, distribution boxes, cable assemblies	**176**
MST®	Cable assemblies, distributors, and accessories	**182**

GST18i3, CABLE ASSEMBLIES, 3-POLE

1.5 mm², 16 A

TECHNICAL DATA			
Rated voltage:	250 V	Protection rating:	IP20, inserted IP40
Rated current:	16 A	Interlock:	Integrated

T-piece with connection cable 3G

Color of cable / T-piece:
Color coding: ☐ White
Application: Mains 250 V
Luminaire connection: Free end

Length (m)	Halogen-free LSOH 3G1.5 Part No.
	☐ White
0.5	99.482.9910.0

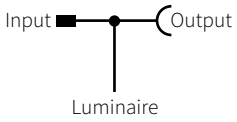

T-piece with connecting cable 3G

Color of cable / T-piece:
Color coding: ☐ White
Application: Mains 250 V
Luminaire connection: GST18i3 female

Length (m)	Halogen-free LSOH 3G1.5 Part No.
	☐ White
0.5	G1.933.0502.2

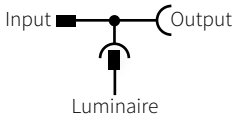

Note:
Cable is only suitable for cabling indoors. The cable is not suitable for use in high temperature zones, near to light bulbs, for through-wiring in the luminaire, for use outdoors, or in areas exposed to considerable UV light. BS7671 559 must be observed.

Technical changes reserved

GST18i3, SWITCHING DISTRIBUTORS WITH CONNECTION CABLE, 3-POLE

1.5 mm², 16 A

TECHNICAL DATA			
Rated voltage:	250 V	Protection rating:	IP20, inserted IP40
Rated current:	16 A	Interlock:	Integrated

On/off switch 1-pole (L1)

Color of cable / enclosure:
Color coding: ■ Black
Application: Mains 250 V
On/off switch – connection cable, free end

Length (m)	Halogen-free LSOH 3G1.5 Part No.
	☐ White
4.0 / 3-core	G1.833.0412.1

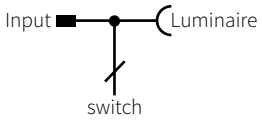

Infrared motion detector (L1)

Color of cable / enclosure:
Color coding: ■ Black
Application: Mains 250 V
Passive infrared switch – connection cable, free end

Length (m)	Halogen-free LSOH 4G1.5 Part No.
	☐ White
4.0 / 4-core	G1.834.0442.1

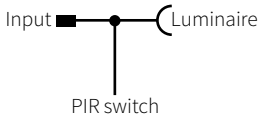

Note:
Cable is only suitable for cabling indoors. The cable is not suitable for use in high temperature zones, near to light bulbs, for through-wiring in the luminaire, for use outdoors, or in areas exposed to considerable UV light. BS7671 559 must be observed.

GST18i3, SWITCHING DISTRIBUTORS, 3-POLE

TECHNICAL DATA			
Rated voltage:	250 V	Rated current:	16 A

On/off switch

Color coding	Color of enclosure	Part No.
☐ White	☐ White	G1.830.0012.1
With through-wiring		

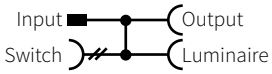

Infrared motion detector, passive

Color coding	Color of enclosure	Part No.
☐ White	☐ White	G1.830.0042.1
With through-wiring		

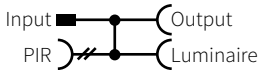

Two-way circuit

Color coding	Color of enclosure	Part No.
☐ White	☐ White	G1.830.0062.1

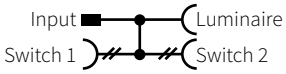

Technical changes reserved

GST18i3, DISTRIBUTION BOXES WITH 2.5 mm² WIRING, METAL ENCLOSURE, 3-POLE

TECHNICAL DATA			
Rated voltage:	250 V	Rated current:	20 A

Two circuits

Color coding	Color of enclosure	Part No.
■ Black	Metal	G1.132.4403.1

Each circuit with 1 female connector, 3-pole

One circuit

Color coding	Color of enclosure	Part No.
■ Black	Metal	G1.130.3813.1

One circuit, 8 female connectors, 3-pole

Two circuits

Color coding	Color of enclosure	Part No.
■ Black	Metal	G1.130.3823.1

Each circuit with 4 female connectors, 3-pole

Besa plate

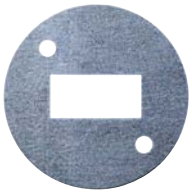

Besa plate, metal plate for Besa distribution box

Color coding	Color of enclosure	Part No.
	Metal	G1.130.3823.1

For 3-pole snap-in connectors (such as Part No. 92.031.9658.1)
A Besa extension ring is additionally required (from third-party supplier)

GST18i3, CABLE ASSEMBLIES, 3-POLE

4.0 mm², 20 A

TECHNICAL DATA		
Rated voltage:	250 V	The use of a locking device is mandatory.
Rated current:	20 A	Locking device for flying leads: see Accessories
Protection rating:	IP20, inserted IP40	

Connecting cable, female - male

H05Z1Z1-F
Halogen-free

		Length (m)	Part No.
Cable color:			☐ White
Color coding:	■ Black	1	G1.033.0104.6
Marking of poles:	N, PE, L / L, PE, N	2	G1.033.0204.6
Application:	Mains 250 V	3	G1.033.0304.6
		4	G1.033.0404.6
		5	G1.033.0504.6
		6	G1.033.0604.6
		7	G1.033.0704.6
		8	G1.033.0804.6

4.0 mm², 20 A

TECHNICAL DATA			
Rated voltage:	250 V	Preparation of conductor ends:	Ultrason. welded
Rated current:	20 A	The use of a locking device is mandatory.	
Protection rating:	IP20, inserted IP40	Locking device for flying leads: see Accessories	

Connection cables female – free end

H05Z1Z1-F
Halogen-free

		Length (m)	Part No.
Cable color:			☐ White
Color coding:	■ Black	1	G1.333.0104.6
Marking of poles:	N, PE, L	2	G1.333.0204.6
Application:	Mains 250 V	3	G1.333.0304.6
		4	G1.333.0404.6
		5	G1.333.0504.6
		6	G1.333.0604.6
		7	G1.333.0704.6
		8	G1.333.0804.6

Other cables, other lengths, other codings on request
Note:
Cable is only suitable for cabling indoors. The cable is not suitable for use in high temperature zones, near to light bulbs, for through-wiring in the luminaire, for use outdoors, or in areas exposed to considerable UV light. BS7671 559 must be observed.

Technical changes reserved

GST18i3, CABLE ASSEMBLIES, 3-POLE

4.0 mm², 20 A

TECHNICAL DATA			
Rated voltage:	250 V	Preparation of conductor ends:	Ultrason. welded
Rated current:	20 A	The use of a locking device is mandatory. Locking device for flying leads: see Accessories	
Protection rating:	IP20, inserted IP40		

Connection cables male – free end

H05Z1Z1-F
Halogen-free

Cable color:	
Color coding:	■ Black
Marking of poles:	L, PE, N
Application:	Mains 250 V

Length (m)	Part No.
	☐ White
1	G1.433.0104.6
2	G1.433.0204.6
3	G1.433.0304.6
4	G1.433.0404.6
5	G1.433.0504.6
6	G1.433.0604.6
7	G1.433.0704.6
8	G1.433.0804.6

Other cables, other lengths, other codings on request

Note:
Cable is only suitable for cabling indoors. The cable is not suitable for use in high temperature zones, near to light bulbs, for through-wiring in the luminaire, for use outdoors, or in areas exposed to considerable UV light. BS7671 559 must be observed.

GST18i4, CABLE ASSEMBLIES, 4-POLE

1.5 mm², 16 A

TECHNICAL DATA			
Rated voltage:	250 V	Protection rating:	IP20, inserted IP40
Rated current:	16 A	Interlock:	Integrated

T-piece with connection cable 3G

Color of cable / T-piece:
Color coding: ■ Black
Luminaire connection: Free end

Length (m)	Halogen-free LSOH 3G1.5 Part No.
	White / black
0.5 / 3-core	G1.943.0542.1

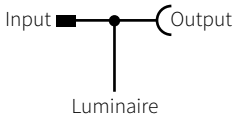

T-piece with connection cable 4G

Color of cable / T-piece:
Color coding: ■ Black
Luminaire connection: Free end

Length (m)	Halogen-free LSOH 4G1.5 Part No.
	White / black
0.5 / 4-core	G1.944.0542.1

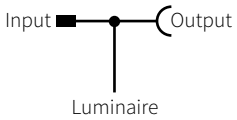

Note:
Cable is only suitable for cabling indoors. The cable is not suitable for use in high temperature zones, near to light bulbs, for through-wiring in the luminaire, for use outdoors, or in areas exposed to considerable UV light. BS7671 559 must be observed.

Technical changes reserved

GST18i4, SWITCHING DISTRIBUTORS WITH CONNECTION CABLE, 4-POLE

1.5 mm², 16 A

TECHNICAL DATA			
Rated voltage:	250 V/400 V	Protection rating:	IP20, inserted IP40
Rated current:	16 A	Interlock:	Integrated

On/off switch 1-pole (L1)

	Length (m)	Halogen-free LSOH 3G1.5 Part No.
Color of cable / enclosure:		☐ White
Color coding: ■ Black	4.0 / 3-core	G1.843.0412.1
On/off switch – connection cable, free end		

On/off switch 1-pole (L2, emergency lighting)

	Length (m)	Halogen-free LSOH 3G1.5 Part No.
Color of cable / enclosure:		☐ White
Color coding: ■ Black	4.0 / 3-core	G1.843.0422.1
On/off switch – connection cable, free end		

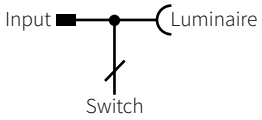

Infrared motion detector

	Length (m)	Halogen-free LSOH 4G1.5 Part No.
Color of cable / enclosure:		☐ White
Color coding: ■ Black	4.0 / 4-core	G1.844.0442.1
Passive infrared switch – connection cable, free end		

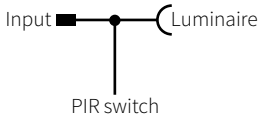

Note:
Cable is only suitable for cabling indoors. The cable is not suitable for use in high temperature zones, near to light bulbs, for through-wiring in the luminaire, for use outdoors, or in areas exposed to considerable UV light. BS7671 559 must be observed.

GST18i4, SWITCHING DISTRIBUTORS WITH CONNECTION CABLE, 4-POLE

1.5 mm², 16 A

TECHNICAL DATA			
Rated voltage:	250 V/400 V	Protection rating:	IP20, inserted IP40
Rated current:	16 A	Interlock:	Integrated

On/off switch 2-pole (L1+L2)

Color of cable / enclosure:
Color coding: ☐White
On/off switch – connection cable, free end

Length (m)	Halogen-free LSOH 5G1.5 Part No.
	☐White
4.0 / 5-core	G1.845.0432.2

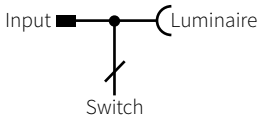

Intermediate piece for 2-way intermediate switch

Color of cable / enclosure:
Color coding: ☐White
2-way switch – connection cable, free end

Length (m)	Halogen-free LSOH 5G1.5 Part No.
	☐White
4.0 / 5-core	G1.845.0472.2

Technical changes reserved

GST18i4, SWITCHING DISTRIBUTORS, 4-POLE

TECHNICAL DATA			
Rated voltage:	250 V	Rated current:	16 A

On/off switch (L1)

Color coding	Color of enclosure	Part No.
☐ White	☐ White	G1.840.0012.1
With through-wiring		

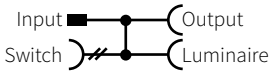

Infrared motion detector, passive (L1)

Color coding	Color of enclosure	Part No.
☐ White	☐ White	G1.840.0042.1
With through-wiring		

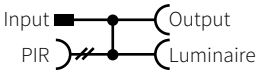

Two-way circuit (L1)

Color coding	Color of enclosure	Part No.
☐ White	☐ White	G1.840.0062.1

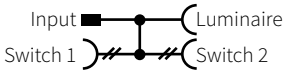

GST18i4, DISTRIBUTION BOXES WITH 2.5 mm2 WIRING, METAL ENCLOSURE, 4-POLE

TECHNICAL DATA			
Rated voltage:	250 V	Rated current:	20 A

Two circuits

Color coding	Color of enclosure	Part No.
■ Black	Metal	G1.142.4403.1

Each circuit with 2 female connectors, 4-pole

One circuit

Color coding	Color of enclosure	Part No.
■ Black	Metal	G1.140.4813.1

One circuit, 8 female connectors, 4-pole

Two circuits

Color coding	Color of enclosure	Part No.
■ Black	Metal	G1.140.4813.1

Each circuit with 4 female connectors, 4-pole

Besa plate, 4 pole

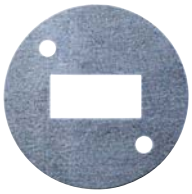

Besa plate, metal plate for Besa distribution box

Color coding	Color of enclosure	Part No.
	Metal	G1.141.1300.1

For 4-pole snap-in connectors (such as Part No. 92.041.9658.1)
A Besa extension ring is additionally required (from third-party supplier)

Technical changes reserved

GST18i4, CABLE ASSEMBLIES, 4-POLE

1.5 mm², 16 A

TECHNICAL DATA		
Rated voltage:	250 V	The use of a locking device is mandatory.
Rated current:	16 A	Locking device for flying leads: see Accessories
Protection rating:	IP20, inserted IP40	

Connecting cable, female - male

LSOH 4G1.5
Halogen-free

		Length (m)	Part No.
Cable color:			☐ White
Color coding:	■ Black	1	G1.044.0102.1
Marking of poles:	2, N, PE, 1 / 1, PE, N, 2	2	G1.044.0202.1
		3	G1.044.0302.1
Application:	Mains 250 V/400 V	4	G1.044.0402.1
		5	G1.044.0502.1
		6	G1.044.0602.1
		7	G1.044.0702.1
		8	G1.044.0802.1
Cable color:			☐ White
Color coding:	☐ White	1	G1.044.0102.2
Marking of poles:	2, N, PE, 1 / 1, PE, N, 2	2	G1.044.0202.2
		3	G1.044.0302.2
Application:	Mains 250 V/400 V	4	G1.044.0402.2
		5	G1.044.0502.2
		6	G1.044.0602.2
		7	G1.044.0702.2
		8	G1.044.0802.2

1.5 mm², 16 A

TECHNICAL DATA			
Rated voltage:	250 V	Preparation of conductor ends:	Ultrason. welded
Rated current:	20 A	The use of a locking device is mandatory.	
Protection rating:	IP20, inserted IP40	Locking device for flying leads: see Accessories	

Connection cables female – free end

LSOH 4G1.5
Halogen-free

		Length (m)	Part No.
Cable color:			☐ White
Color coding:	■ Black	1	G1.344.0102.1
Marking of poles:	2, N, PE, 1	2	G1.344.0202.1
Application:	Mains 250 V/400 V	3	G1.344.0302.1
		4	G1.344.0402.1
		5	G1.344.0502.1
		6	G1.344.0602.1
		7	G1.344.0702.1
		8	G1.344.0802.1
Cable color:			☐ White
Color coding:	☐ White	1	G1.344.0102.2
Marking of poles:	2, N, PE, 1	2	G1.344.0202.2
Application:	Mains 250 V/400 V	3	G1.344.0302.2
		4	G1.344.0402.2
		5	G1.344.0502.2
		6	G1.344.0602.2
		7	G1.344.0702.2
		8	G1.344.0802.2

Other cables, other lengths, other codings on request

Note:

Cable is only suitable for cabling indoors. The cable is not suitable for use in high temperature zones, near to light bulbs, for through-wiring in the luminaire, for use outdoors, or in areas exposed to considerable UV light. BS7671 559 must be observed.

GST18i4, CABLE ASSEMBLIES, 4-POLE

1.5 mm², 16 A

TECHNICAL DATA			
Rated voltage:	250 V	Preparation of conductor ends:	Ultrason. welded
Rated current:	16 A		
Protection rating:	IP20, inserted IP40	The use of a locking device is mandatory. Locking device for flying leads: see Accessories	

Connection cables male – free end

LSOH 4G1.5
Halogen-free

		Length (m)	Part No.
Cable color:			☐ White
Color coding:	■ Black	1	G1.444.0102.1
Marking of poles:	1, PE, N, 2	2	G1.444.0202.1
Application:	Mains 250 V/400 V	3	G1.444.0302.1
		4	G1.444.0402.1
		5	G1.444.0502.1
		6	G1.444.0602.1
		7	G1.444.0702.1
		8	G1.444.0802.1
Cable color:			☐ White
Color coding:	☐ White	1	G1.444.0102.2
Marking of poles:	1, PE, N, 2	2	G1.444.0202.2
Application:	Mains 250 V/400 V	3	G1.444.0302.2
		4	G1.444.0402.2
		5	G1.444.0502.2
		6	G1.444.0602.2
		7	G1.444.0702.2
		8	G1.444.0802.2

Other cables, other lengths, other codings on request
Note:
Cable is only suitable for cabling indoors. The cable is not suitable for use in high temperature zones, near to light bulbs, for through-wiring in the luminaire, for use outdoors, or in areas exposed to considerable UV light. BS7671 559 must be observed.

Technical changes reserved

GST18i4, CABLE ASSEMBLIES, 4-POLE

2.5 mm², 20 A

TECHNICAL DATA		
Rated voltage:	250 V	The use of a locking device is mandatory.
Rated current:	20 A	Locking device for flying leads: see Accessories
Protection rating:	IP20, inserted IP40	

Connecting cable, female - male

LSOH 4G2.5
Halogen-free

		Length (m)	Part No.
Cable color:			☐ White
Color coding:	■ Black	1	G1.044.0103.1
Marking of poles:	2, N, PE, 1 / 1, PE, N, 2	2	G1.044.0203.1
		3	G1.044.0303.1
Application:	Mains 250 V/400 V	4	G1.044.0403.1
		5	G1.044.0503.1
		6	G1.044.0603.1
		7	G1.044.0703.1
		8	G1.044.0803.1
Cable color:			☐ White
Color coding:	☐ White	1	G1.044.0103.2
Marking of poles:	2, N, PE, 1 / 1, PE, N, 2	2	G1.044.0203.2
		3	G1.044.0303.2
Application:	Mains 250 V/400 V	4	G1.044.0403.2
		5	G1.044.0503.2
		6	G1.044.0603.2
		7	G1.044.0703.2
		8	G1.044.0803.2

2.5 mm², 20 A

TECHNICAL DATA			
Rated voltage:	250 V	Preparation of conductor ends:	Ultrason. welded
Rated current:	20 A	The use of a locking device is mandatory.	
Protection rating:	IP20, inserted IP40	Locking device for flying leads: see Accessories	

Connection cables female – free end

LSOH 4G1.5
Halogen-free

		Length (m)	Part No.
Cable color:			☐ White
Color coding:	■ Black	1	G1.344.0103.1
Marking of poles:	2, N, PE, 1	2	G1.344.0203.1
Application:	Mains 250 V/400 V	3	G1.344.0303.1
		4	G1.344.0403.1
		5	G1.344.0503.1
		6	G1.344.0603.1
		7	G1.344.0703.1
		8	G1.344.0803.1
Cable color:			☐ White
Color coding:	☐ White	1	G1.344.0103.2
Marking of poles:	2, N, PE, 1	2	G1.344.0203.2
Application:	Mains 250 V/400 V	3	G1.344.0303.2
		4	G1.344.0403.2
		5	G1.344.0503.2
		6	G1.344.0603.2
		7	G1.344.0703.2
		8	G1.344.0803.2

Other cables, other lengths, other codings on request

Note:
Cable is only suitable for cabling indoors. The cable is not suitable for use in high temperature zones, near to light bulbs, for through-wiring in the luminaire, for use outdoors, or in areas exposed to considerable UV light. BS7671 559 must be observed.

GST18i4, CABLE ASSEMBLIES, 4-POLE

2.5 mm², 20 A

TECHNICAL DATA			
Rated voltage:	250 V	Preparation of conductor ends:	Ultrason. welded
Rated current:	20 A		
Protection rating:	IP20, inserted IP40	The use of a locking device is mandatory. Locking device for flying leads: see Accessories	

Connection cables male – free end

LSOH 4G2.5
Halogen-free

		Length (m)	Part No.
Cable color:			☐ White
Color coding:	■ Black	1	G1.444.0103.1
Marking of poles:	1, PE, N, 2	2	G1.444.0203.1
Application:	Mains 250 V/400 V	3	G1.444.0303.1
		4	G1.444.0403.1
		5	G1.444.0503.1
		6	G1.444.0603.1
		7	G1.444.0703.1
		8	G1.444.0803.1
Cable color:			☐ White
Color coding:	☐ White	1	G1.444.0103.2
Marking of poles:	1, PE, N, 2	2	G1.444.0203.2
Application:	Mains 250 V/400 V	3	G1.444.0303.2
		4	G1.444.0403.2
		5	G1.444.0503.2
		6	G1.444.0603.2
		7	G1.444.0703.2
		8	G1.444.0803.2

Other cables, other lengths, other codings on request
Note:
Cable is only suitable for cabling indoors. The cable is not suitable for use in high temperature zones, near to light bulbs, for through-wiring in the luminaire, for use outdoors, or in areas exposed to considerable UV light. BS7671 559 must be observed.

Technical changes reserved

GST18i5, CABLE ASSEMBLIES, 5-POLE

1.5 mm², 16 A

TECHNICAL DATA			
Rated voltage:	250 V/400 V	Protection rating:	IP20, inserted IP40
Rated current:	16 A	Interlock:	Integrated

T-piece with connection cable 3G

		Length (m)	Halogen-free LSOH 3G1.5 Part No.
Color of cable / T-piece:			White / black
Color coding:	☐ White	0.5 / 3-core	G1.953.0542.1
Luminaire connection:	Free end		
Color of cable / T-piece:			White / pastel blue
Color coding:	■ Pastel blue	0.5 / 3-core	G1.953.0542.7
Luminaire connection:	Free end		

T-piece with connection cable 2x1.5 mm²

		Length (m)	Halogen-free LSOH 2x1.5 Part No.
Color of cable / T-piece:			White / pastel blue
Color coding:	■ Pastel blue	0.5 / 2-core	G1.952.0542.7
Luminaire connection:	Free end		

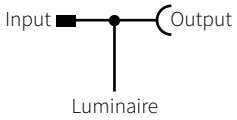

T-piece with connection cable 5G

		Length (m)	Halogen-free LSOH 5G1.5 Part No.
Color of cable / T-piece:			White / pastel blue
Color coding:	■ Pastel blue	0.5 / 5-core	G1.955.0542.7
Luminaire connection:	Free end		
Color of cable / T-piece:			White / black
Color coding:	☐ White	0.5 / 5-core	G1.955.0542.1
Luminaire connection:	Free end		

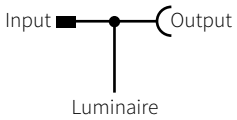

Note:
Cable is only suitable for cabling indoors. The cable is not suitable for use in high temperature zones, near to light bulbs, for through-wiring in the luminaire, for use outdoors, or in areas exposed to considerable UV light. BS7671 559 must be observed.

Technical changes reserved

GST18i5, BESA PLATE, 5-POLE

Besa plate, 5-pole

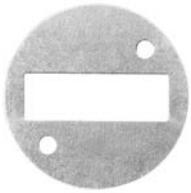

Besa plate, metal plate for Besa distribution box

Color coding	Color of enclosure	Part No.
	Metal	34.399.1673.1

For 5-pole snap-in connectors (such as Part No. 92.051.8658.1)
A Besa extension ring is additionally required (from third-party supplier)

GST18i5, CABLE ASSEMBLIES, 5-POLE

1.5 mm², 16 A

TECHNICAL DATA			
Rated voltage:	250 V	The use of a locking device is mandatory.	
Rated current:	16 A	Locking device for flying leads: see Accessories	
Protection rating:	IP20, inserted IP40		

Connecting cable, female - male

LSOH 5G1.5
Halogen-free

		Length (m)	Part No.
Cable color:			☐ White
Color coding:	■ Pastel blue	1	G1.055.0102.7
Marking of poles:	L, N, PE, D2, D1 / D1, D2, PE, N, L	2	G1.055.0202.7
		3	G1.055.0302.7
Application:	Mains 250 V + not SELV	4	G1.055.0402.7
		5	G1.055.0502.7
		7	G1.055.0702.7
		10	G1.055.1002.7
Cable color:			■ Black
Color coding:	■ Black	1	G1.055.0102.1
Marking of poles:	3, N, PE, 2, 1 / 1, 2, PE, N, 3	2	G1.055.0202.1
		3	G1.055.0302.1
Application:	Mains 250 V/400 V	4	G1.055.0402.1
		5	G1.055.0502.1
		7	G1.055.0702.1
		10	G1.055.1002.1

Due to the different wiring configurations, adapted to British standards, these cables must not be used together with other GST18i5 cable assemblies.

1.5 mm², 16 A

TECHNICAL DATA			
Rated voltage:	250 V	Preparation of conductor ends:	Ultrason. welded
Rated current:	16 A	The use of a locking device is mandatory.	
Protection rating:	IP20, inserted IP40	Locking device for flying leads: see Accessories	

Connection cable, female - free end

LSOH 5G1.5
Halogen-free

		Length (m)	Part No.
Cable color:			☐ White
Color coding:	■ Pastel blue	1	G1.355.0102.7
Marking of poles:	L, N, PE, D2, D1	2	G1.355.0202.7
Application:	Mains 250 V + not SELV	3	G1.355.0302.7
		4	G1.355.0402.7
		5	G1.355.0502.7
		7	G1.355.0702.7
		10	G1.355.1002.7
Cable color:			☐ White
Color coding:	■ Black	1	G1.355.0102.1
Marking of poles:	3, N, PE, 2, 1	2	G1.355.0202.1
Application:	Mains 250 V/400 V	3	G1.355.0302.1
		4	G1.355.0402.1
		5	G1.355.0502.1
		7	G1.355.0702.1
		10	G1.355.1002.1

Due to the different wiring configurations, adapted to British standards, these cables must not be used together with other GST18i5 cable assemblies.

Other cables, other lengths, other codings on request
Note:
Cable is only suitable for cabling indoors. The cable is not suitable for use in high temperature zones, near to light bulbs, for through-wiring in the luminaire, for use outdoors, or in areas exposed to considerable UV light. BS7671 559 must be observed.

GST18i5, CABLE ASSEMBLIES, 5-POLE

1.5 mm², 16 A

TECHNICAL DATA			
Rated voltage:	250 V	Preparation of conductor ends:	Ultrason. welded
Rated current:	16 A		
Protection rating:	IP20, inserted IP40	The use of a locking device is mandatory. Locking device for flying leads: see Accessories	

Connection cables male – free end

LSOH 5G1.5
Halogen-free

		Length (m)	Part No.
Cable color:			☐ White
Color coding:	■ Pastel blue	1	G1.455.0102.7
Marking of poles:	D1, D2, PE, N, L	2	G1.455.0202.7
Application:	Mains 250 V + not SELV	3	G1.455.0302.7
		4	G1.455.0402.7
		5	G1.455.0502.7
		7	G1.455.0702.7
		10	G1.455.1002.7
Cable color:			☐ White
Color coding:	■ Black	1	G1.455.0102.1
Marking of poles:	1, 2, PE, N, 3	2	G1.455.0202.1
Application:	Mains 250 V/400 V	3	G1.455.0302.1
		4	G1.455.0402.1
		5	G1.455.0502.1
		7	G1.455.0702.1
		10	G1.455.1002.1

Due to the different wiring configurations, adapted to British standards, these cables must not be used together with other GST18i5 cable assemblies.

Note:
Cable is only suitable for cabling indoors. The cable is not suitable for use in high temperature zones, near to light bulbs, for through-wiring in the luminaire, for use outdoors, or in areas exposed to considerable UV light. BS7671 559 must be observed.

GST18i6, DISTRIBUTORS WITH CONNECTION CABLE, 6-POLE

1.5 mm², 16 A

TECHNICAL DATA			
Rated voltage:	250 V	Protection rating:	IP20, inserted IP40
Rated current:	16 A	Interlock:	Integrated

T-piece with connection cable 2x1.5 mm²

		Length (m)	Halogen-free LSOH 2x1.5 Part No.
Color of cable / enclosure:			White / white
Color coding:	Pastel blue / black	0.5 / 2-core	G1.962.0542.9
Marking of poles:	3, 2, 1, N, PE, L		
Application:	Mains 250 V + dimming + emergency		
Luminaire connection:	Free end		

T-piece with connection cable 3G

		Length (m)	Halogen-free LSOH 3G1.5 Part No.
Color of cable / enclosure:			White / white
Color coding:	Pastel blue / black	0.5 / 3-core	G1.963.0542.9
Marking of poles:	3, 2, 1, N, PE, L		
Application:	Mains 250 V + dimming + emergency		
Luminaire connection:	Free end		

T-piece with connection cable 4G

		Length (m)	Halogen-free LSOH 4G1.5 Part No.
Color of cable / enclosure:			White / white
Color coding:	Pastel blue / black	0.5 / 4-core	G1.964.0542.9
Marking of poles:	3, 2, 1, N, PE, L		
Application:	Mains 250 V + dimming + emergency		
Luminaire connection:	Free end		

Note:
Cable is only suitable for cabling indoors. The cable is not suitable for use in high temperature zones, near to light bulbs, for through-wiring in the luminaire, for use outdoors, or in areas exposed to considerable UV light. BS7671 559 must be observed.

Technical changes reserved

GST18i6, DISTRIBUTORS WITH CONNECTION CABLE, 6-POLE

1.5 mm², 16 A

TECHNICAL DATA			
Rated voltage:	250 V	Protection rating:	IP20, inserted IP40
Rated current:	16 A	Interlock:	Integrated

T-piece with connection cable 5G

		Length (m)	Halogen-free LSOH 5G1.5 Part No.
Color of cable / enclosure:			White / white
Color coding:	Pastel blue / black	0.5 / 5-core	G1.965.0542.9
Marking of poles:	3, 2, 1, N, PE, L		
Application:	Mains 250 V + dimming + emergency		
Luminaire connection:	Free end		

T-piece with connection cable 6G

		Length (m)	Halogen-free LSOH 6G1.5 Part No.
Color of cable / enclosure:			White / white
Color coding:	Pastel blue / black	0.5 / 6-core	G1.966.0542.9
Marking of poles:	3, 2, 1, N, PE, L		
Application:	Mains 250 V + dimming + emergency		
Luminaire connection:	Free end		

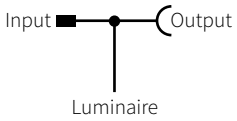

Note:
Cable is only suitable for cabling indoors. The cable is not suitable for use in high temperature zones, near to light bulbs, for through-wiring in the luminaire, for use outdoors, or in areas exposed to considerable UV light. BS7671 559 must be observed.

GST18i6, SWITCHING DISTRIBUTORS, 6-POLE

TECHNICAL DATA			
Rated voltage:	250 V	Rated current:	16 A

Infrared motion detector, passive (L1)

Color coding	Color of enclosure	Part No.
Pastel blue / black	White	G1.860.0042.7
With through-wiring		

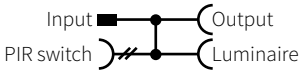

Distribution block without switching function

Color coding	Color of enclosure	Part No.
White	White	G1.966.0000.7
With through-wiring		

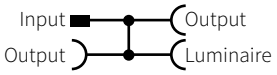

Technical changes reserved

GST18i6, DISTRIBUTION BOXES WITH 2.5 mm² WIRING, METAL ENCLOSURE, 6-POLE

TECHNICAL DATA			
Rated voltage:	250 V	Rated current:	20 A

Two circuits

Color coding	Color of enclosure	Part No.
Pastel blue / black	Metal	G1.162.6603.7

Each circuit with 1 female connector, 6-pole, coding pastel blue/black

Two circuits

Color coding	Color of enclosure	Part No.
Black	Metal	G1.162.6603.1

Each circuit with 1 female connector, 6-pole, coding black/black

Besa plate, 6-pole

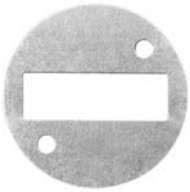

Besa plate, metal plate for Besa distribution box

Color coding	Color of enclosure	Part No.
	Metal	G1.161.1300.1

For 6-pole snap-in connectors (such as Part No. 92.061.8658.1)
A Besa extension ring is additionally required (from third-party supplier)

GST18i6, CABLE ASSEMBLIES, 6-POLE

1.5 mm², 16 A

TECHNICAL DATA		
Rated voltage:	250 V	The use of a locking device is mandatory.
Rated current:	16 A	Locking device for flying leads: see Accessories
Protection rating:	IP20, inserted IP40	

Connecting cable, female - male

LSOH 6G1.5
Halogen-free

		Length (m)	Part No.
Cable color:			☐ White
Color coding:	■■ Pastel blue / black	1	G1.066.0102.7
Marking of poles:	L, PE, N, 1, 2, 3 / 3, 2, 1, N, PE, L	2	G1.066.0202.7
		3	G1.066.0302.7
Application:	Mains 250 V + dimming + emergency	4	G1.066.0402.7
		5	G1.066.0502.7
		6	G1.066.0602.7
		7	G1.066.0702.7
		10	G1.066.1002.7

To order cable assemblies with coding combination black/gray replace the last digit with 0.

Due to the different wiring configurations, adapted to British standards, these cables must not be used together with other GST18i6 cable assemblies.

1.5 mm², 16 A

TECHNICAL DATA			
Rated voltage:	250 V	Preparation of conductor ends:	Ultrason. welded
Rated current:	16 A	The use of a locking device is mandatory.	
Protection rating:	IP20, inserted IP40	Locking device for flying leads: see Accessories	

Connection cables female – free end

LSOH 6G1.5
Halogen-free

		Length (m)	Part No.
Cable color:			☐ White
Color coding:	■■ Pastel blue / black	1	G1.366.0102.7
Marking of poles:	L, PE, N, 1, 2, 3	2	G1.366.0202.7
Application:	Mains 250 V + dimming + emergency	3	G1.366.0302.7
		4	G1.366.0402.7
		5	G1.366.0502.7
		6	G1.366.0602.7
		7	G1.366.0702.7
		10	G1.366.1002.7

To order cable assemblies with coding combination black/gray replace the last digit with 0.

Due to the different wiring configurations, adapted to British standards, these cables must not be used together with other GST18i6 cable assemblies.

Other cables, other lengths, other codings on request
Note:
Cable is only suitable for cabling indoors. The cable is not suitable for use in high temperature zones, near to light bulbs, for through-wiring in the luminaire, for use outdoors, or in areas exposed to considerable UV light. BS7671 559 must be observed.

Technical changes reserved

GST18i6, CABLE ASSEMBLIES, 6-POLE

1.5 mm², 16 A

TECHNICAL DATA			
Rated voltage:	250 V	Preparation of conductor ends:	Ultrason. welded
Rated current:	16 A	The use of a locking device is mandatory. Locking device for flying leads: see Accessories	
Protection rating:	IP20, inserted IP40		

Connection cables female – free end

LSOH 6G1.5
Halogen-free

		Length (m)	Part No.
Cable color:			☐ White
Color coding:	■■ Pastel blue / black	1	G1.466.0102.7
Marking of poles:	3, 2, 1, N, PE, L	2	G1.466.0202.7
Application:	Mains 250 V + dimming + emergency	3	G1.466.0302.7
		4	G1.466.0402.7
		5	G1.466.0502.7
		6	G1.466.0602.7
		7	G1.466.0702.7
		10	G1.466.1002.7

To order cable assemblies with coding combination black/gray replace the last digit with 0.

Due to the different wiring configurations, adapted to British standards, these cables must not be used together with other GST18i6 cable assemblies.

Other cables, other lengths, other codings on request
Note:
Cable is only suitable for cabling indoors. The cable is not suitable for use in high temperature zones, near to light bulbs, for through-wiring in the luminaire, for use outdoors, or in areas exposed to considerable UV light. BS7671 559 must be observed.

MST®, CABLE ASSEMBLIES

Connecting cable, female - male

TECHNICAL DATA		
Rated voltage:	250 V / 250 V/400 V	Residual current device (RCD) must be used
Protection rating:	IP20	

MST32i3, 3-pole

Flexible metal conduit

Color coding: C1
Application: Mains 250 V, 32 A, 6.0 mm²

Length (m)	Part No.
2	G5.031.0206.1
3	G5.031.0306.1
5	G5.031.0506.1
7	G5.031.0706.1
9	G5.031.0906.1
11	G5.031.1106.1
13	G5.031.1306.1
15	G5.031.1506.1

MST25i4, 4-pole

Flexible metal conduit

Color coding: C2
Application: Mains 250 V + "high integrity earth", 25 A, 4.0 mm²

Length (m)	Part No.
2	G5.041.0204.2
3	G5.041.0304.2
5	G5.041.0504.2
7	G5.041.0704.2
9	G5.041.0904.2
11	G5.041.1104.2
13	G5.041.1304.2
15	G5.041.1504.2

MST20i3, 3-pole

Flexible metal conduit

Color coding: C3
Application: Mains 250 V, 20 A, 2.5 mm²

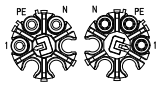

Length (m)	Part No.
2	G5.031.0203.3
3	G5.031.0303.3
5	G5.031.0503.3
7	G5.031.0703.3
9	G5.031.0903.3
11	G5.031.1103.3
13	G5.031.1303.3
15	G5.031.1503.3

MST20i3, 3-pole

Flexible metal conduit

Color coding: C3
Application: Mains 250 V, 20 A, 4.0 mm²

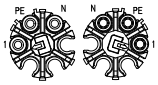

Length (m)	Part No.
2	G5.031.0204.3
3	G5.031.0304.3
5	G5.031.0504.3
7	G5.031.0704.3
9	G5.031.0904.3
11	G5.031.1104.3
13	G5.031.1304.3
15	G5.031.1504.3

MST20i4, 4-pole

Flexible metal conduit

Color coding: C4
Application: Mains 250 V + Emergency, 20 A, 2.5 mm²

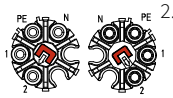

Length (m)	Part No.
2	G5.041.0203.4
3	G5.041.0303.4
5	G5.041.0503.4
7	G5.041.0703.4
9	G5.041.0903.4
11	G5.041.1103.4
13	G5.041.1303.4
15	G5.041.1503.4

MST20i4, 4-pole

Flexible metal conduit

Color coding: C4
Application: Mains 250 V + Emergency, 20 A, 4.0 mm²

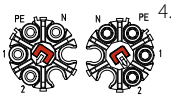

Length (m)	Part No.
2	G5.041.0204.4
3	G5.041.0304.4
5	G5.041.0504.4
7	G5.041.0704.4
9	G5.041.0904.4
11	G5.041.1104.4
13	G5.041.1304.4
15	G5.041.1504.4

MST20i5, 5-pole

Flexible metal conduit

Color coding: C5 DALI
Application: DALI 250 V, 20 A, 2.5 mm²

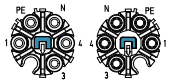

Length (m)	Part No.
2	G5.051.0203.5
3	G5.051.0303.5
5	G5.051.0503.5
7	G5.051.0703.5
9	G5.051.0903.5
11	G5.051.1103.5
13	G5.051.1303.5
15	G5.051.1503.5

MST20i6, 6-pole

Flexible metal conduit

Color coding: C6
Application: DALI 250 V + Emergency, 20 A, 2.5 mm²

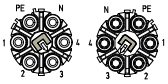

Length (m)	Part No.
2	G5.061.0203.6
3	G5.061.0303.6
5	G5.061.0503.6
7	G5.061.0703.6
9	G5.061.0903.6
11	G5.061.1103.6
13	G5.061.1303.6
15	G5.061.1503.6

MST20i5, 5-pole

Flexible metal conduit

Color coding: C7, 3-phase
Application: Mains 250 V/ 400 V, 20 A, 2.5 mm²

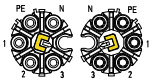

Length (m)	Part No.
2	G5.051.0203.7
3	G5.051.0303.7
5	G5.051.0503.7
7	G5.051.0703.7
9	G5.051.0903.7
11	G5.051.1103.7
13	G5.051.1303.7
15	G5.051.1503.7

MST20i6, 6-pole

Flexible metal conduit

Color coding: C8 LON
Application: Mains 250 V, 20 A, 2.5 mm²

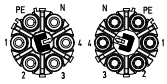

Length (m)	Part No.
2	G5.061.0203.8
3	G5.061.0303.8
5	G5.061.0503.8
7	G5.061.0703.8
9	G5.061.0903.8
11	G5.061.1103.8
13	G5.061.1303.8
15	G5.061.1503.8

Technical changes reserved

MST®, CABLE ASSEMBLIES

Connecting cable, female – free end

TECHNICAL DATA		
Rated voltage:	250 V / 250 V/400 V	Residual current device (RCD) must be used
Protection rating:	IP20	

MST32i3, 3-pole

Flexible metal conduit

Color coding: C1
Application: Mains 250 V, 32 A, 6.0 mm²

Length (m)	Part No.
2	G5.331.0206.1
3	G5.331.0306.1
5	G5.331.0506.1
7	G5.331.0706.1
9	G5.331.0906.1
11	G5.331.1106.1
13	G5.331.1306.1
15	G5.331.1506.1

MST25i4, 4-pole

Flexible metal conduit

Color coding: C2
Application: Mains 250 V + "high integrity earth", 25 A, 4.0 mm²

Length (m)	Part No.
2	G5.341.0204.2
3	G5.341.0304.2
5	G5.341.0504.2
7	G5.341.0704.2
9	G5.341.0904.2
11	G5.341.1104.2
13	G5.341.1304.2
15	G5.341.1504.2

MST20i3, 3-pole

Flexible metal conduit

Color coding: C3
Application: Mains 250 V, 20 A, 2.5 mm²

Length (m)	Part No.
2	G5.331.0203.3
3	G5.331.0303.3
5	G5.331.0503.3
7	G5.331.0703.3
9	G5.331.0903.3
11	G5.331.1103.3
13	G5.331.1303.3
15	G5.331.1503.3

MST20i3, 3-pole

Flexible metal conduit

Color coding: C3
Application: Mains 250 V, 20 A, 4.0 mm²

Length (m)	Part No.
2	G5.331.0204.3
3	G5.331.0304.3
5	G5.331.0504.3
7	G5.331.0704.3
9	G5.331.0904.3
11	G5.331.1104.3
13	G5.331.1304.3
15	G5.331.1504.3

MST20i4, 4-pole

Flexible metal conduit

Color coding: C4
Application: Mains 250 V + Emergency, 20 A, 2.5 mm²

Length (m)	Part No.
2	G5.341.0203.4
3	G5.341.0303.4
5	G5.341.0503.4
7	G5.341.0703.4
9	G5.341.0903.4
11	G5.341.1103.4
13	G5.341.1303.4
15	G5.341.1503.4

MST20i4, 4-pole

Flexible metal conduit

Color coding: C4
Application: Mains 250 V + Emergency, 20 A, 4.0 mm²

Length (m)	Part No.
2	G5.341.0204.4
3	G5.341.0304.4
5	G5.341.0504.4
7	G5.341.0704.4
9	G5.341.0904.4
11	G5.341.1104.4
13	G5.341.1304.4
15	G5.341.1504.4

MST20i5, 5-pole

Flexible metal conduit

Color coding: C5 DALI
Application: DALI 250 V, 20 A, 2.5 mm²

Length (m)	Part No.
2	G5.351.0203.5
3	G5.351.0303.5
5	G5.351.0503.5
7	G5.351.0703.5
9	G5.351.0903.5
11	G5.351.1103.5
13	G5.351.1303.5
15	G5.351.1503.5

MST20i6, 6-pole

Flexible metal conduit

Color coding: C6
Application: DALI 250 V + Emergency, 20 A, 2.5 mm²

Length (m)	Part No.
2	G5.361.0203.6
3	G5.361.0303.6
5	G5.361.0503.6
7	G5.361.0703.6
9	G5.361.0903.6
11	G5.361.1103.6
13	G5.361.1303.6
15	G5.361.1503.6

MST20i5, 5-pole

Flexible metal conduit

Color coding: C7, 3-phase
Application: Mains 250 V/ 400V, 20 A, 2.5 mm²

Length (m)	Part No.
2	G5.351.0203.7
3	G5.351.0303.7
5	G5.351.0503.7
7	G5.351.0703.7
9	G5.351.0903.7
11	G5.351.1103.7
13	G5.351.1303.7
15	G5.351.1503.7

MST20i6, 6-pole

Flexible metal conduit

Color coding: C8 LON
Application: Mains 250 V, 20 A, 2.5 mm²

Length (m)	Part No.
2	G5.361.0203.8
3	G5.361.0303.8
5	G5.361.0503.8
7	G5.361.0703.8
9	G5.361.0903.8
11	G5.361.1103.8
13	G5.361.1303.8
15	G5.361.1503.8

MST®, CABLE ASSEMBLIES

Connection cable, male – free end

TECHNICAL DATA		
Rated voltage:	250 V / 250 V/400 V	Residual current device (RCD) must be used
Protection rating:	IP20	

MST32i3, 3-pole

Flexible metal conduit

Color coding: C1
Application: Mains 250 V, 32 A, 6.0 mm²

Length (m)	Part No.
2	G5.431.0206.1
3	G5.431.0306.1
5	G5.431.0506.1
7	G5.431.0706.1
9	G5.431.0906.1
11	G5.431.1106.1
13	G5.431.1306.1
15	G5.431.1506.1

MST25i4, 4-pole

Flexible metal conduit

Color coding: C2
Application: Mains 250 V + "high integrity earth", 25 A, 4.0 mm²

Length (m)	Part No.
2	G5.441.0204.2
3	G5.441.0304.2
5	G5.441.0504.2
7	G5.441.0704.2
9	G5.441.0904.2
11	G5.441.1104.2
13	G5.441.1304.2
15	G5.441.1504.2

MST20i3, 3-pole

Flexible metal conduit

Color coding: C3
Application: Mains 250 V, 20 A, 2.5 mm²

Length (m)	Part No.
2	G5.431.0203.3
3	G5.431.0303.3
5	G5.431.0503.3
7	G5.431.0703.3
9	G5.431.0903.3
11	G5.431.1103.3
13	G5.431.1303.3
15	G5.431.1503.3

MST20i3, 3-pole

Flexible metal conduit

Color coding: C3
Application: Mains 250 V, 20 A, 4.0 mm²

Length (m)	Part No.
2	G5.431.0204.3
3	G5.431.0304.3
5	G5.431.0504.3
7	G5.431.0704.3
9	G5.431.0904.3
11	G5.431.1104.3
13	G5.431.1304.3
15	G5.431.1504.3

MST20i4, 4-pole

Flexible metal conduit

Color coding: C4
Application: Mains 250 V + Emergency, 20 A, 2.5 mm²

Length (m)	Part No.
2	G5.441.0203.4
3	G5.441.0303.4
5	G5.441.0503.4
7	G5.441.0703.4
9	G5.441.0903.4
11	G5.441.1103.4
13	G5.441.1303.4
15	G5.441.1503.4

MST20i4, 4-pole

Flexible metal conduit

Color coding: C4
Application: Mains 250 V + Emergency, 20 A, 4.0 mm²

Length (m)	Part No.
2	G5.441.0204.4
3	G5.441.0304.4
5	G5.441.0504.4
7	G5.441.0704.4
9	G5.441.0904.4
11	G5.441.1104.4
13	G5.441.1304.4
15	G5.441.1504.4

MST20i5, 5-pole

Flexible metal conduit

Color coding: C5 DALI
Application: DALI 250 V, 20 A, 2.5 mm²

Length (m)	Part No.
2	G5.451.0203.5
3	G5.451.0303.5
5	G5.451.0503.5
7	G5.451.0703.5
9	G5.451.0903.5
11	G5.451.1103.5
13	G5.451.1303.5
15	G5.451.1503.5

MST20i6, 6-pole

Flexible metal conduit

Color coding: C6
Application: DALI 250 V + Emergency, 20 A, 2.5 mm²

Length (m)	Part No.
2	G5.461.0203.6
3	G5.461.0303.6
5	G5.461.0503.6
7	G5.461.0703.6
9	G5.461.0903.6
11	G5.461.1103.6
13	G5.461.1303.6
15	G5.461.1503.6

MST20i5, 5-pole

Flexible metal conduit

Color coding: C7, 3-phase
Application: Mains 250 V/ 400V, 20 A, 2.5 mm²

Length (m)	Part No.
2	G5.451.0203.7
3	G5.451.0303.7
5	G5.451.0503.7
7	G5.451.0703.7
9	G5.451.0903.7
11	G5.451.1103.7
13	G5.451.1303.7
15	G5.451.1503.7

MST20i6, 6-pole

Flexible metal conduit

Color coding: C8 LON
Application: Mains 250 V, 20 A, 2.5 mm²

Length (m)	Part No.
2	G5.461.0203.8
3	G5.461.0303.8
5	G5.461.0503.8
7	G5.461.0703.8
9	G5.461.0903.8
11	G5.461.1103.8
13	G5.461.1303.8
15	G5.461.1503.8

Technical changes reserved

MST®, CABLE ASSEMBLIES

Connecting cable, female - male

TECHNICAL DATA

Rated voltage:	250 V	Residual current device (RCD) must be used
Protection rating:	IP20	

MST20i3, 3-pole

H05Z1Z1-F

Color coding: ☐ C3
Application: Mains 250 V, 20 A, 4.0 mm²

Length (m)	Part No.
2	G5.036.0204.3
3	G5.036.0304.3
5	G5.036.0504.3
7	G5.036.0704.3
9	G5.036.0904.3
11	G5.036.1104.3
13	G5.036.1304.3
15	G5.036.1504.3

MST20i4, 4-pole

H05Z1Z1-F

Color coding: ■ L2
Application: Mains 250 V + E, 20 A, 4.0 mm²

Length (m)	Part No.
2	G5.046.0204.C
3	G5.046.0304.C
5	G5.046.0504.C
7	G5.046.0704.C
9	G5.046.0904.C
11	G5.046.1104.C
13	G5.046.1304.C
15	G5.046.1504.C

Connection cable, male – free end

TECHNICAL DATA

Rated voltage:	250 V / 400 V	Residual current device (RCD) must be used
Protection rating:	IP20	

MST20i5, 5-pole

H05Z1Z1-F

Color coding: ■ C5 DALI
Application: DALI 250 V, 20 A, 2.5 mm²

Length (m)	Part No.
2	G5.456.0203.5
3	G5.456.0303.5
5	G5.456.0503.5
7	G5.456.0703.5
9	G5.456.0903.5
11	G5.456.1103.5
13	G5.456.1303.5
15	G5.456.1503.5

MST®, T DISTRIBUTORS

T distributors with open end

TECHNICAL DATA		
Rated voltage:	250 V / 250 V/400 V	Residual current device (RCD) must be used
Protection rating:	IP20	

MST32i3, 3-pole

Flexible metal conduit

Color coding: ■ C1
Application: Mains 250 V 32 A
Cross section of drop: 6.0 mm²

Length (m)	Part No.
0,5	G5.931.0596.1
1,0	G5.931.1096.1

MST32i3, 3-pole

Flexible metal conduit

Color coding: ■ C1
Application: Mains 250 V 32 A
Cross section of drop: 4.0 mm²

Length (m)	Part No.
0,5	G5.931.0594.1
1,0	G5.931.1094.1

MST20i3, 3-pole

Flexible metal conduit

Color coding: □ C3
Application: Mains 250 V 20 A
Cross section of drop: 2.5 mm²

Length (m)	Part No.
0,5	G5.931.0593.3
1,0	G5.931.1093.3
1,5	G5.931.1593.3
2,0	G5.931.2093.3
3,0	G5.931.3093.3
4,0	G5.931.4093.3
5,0	G5.931.5093.3

MST20i3, 3-pole

Flexible metal conduit

Color coding: □ C3
Application: Mains 250 V 20 A
Cross section of drop: 4.0 mm²

Length (m)	Part No.
0,5	G5.931.0594.3
1,0	G5.931.1094.3
1,5	G5.931.1594.3
2,0	G5.931.2094.3
3,0	G5.931.3094.3
4,0	G5.931.4094.3
5,0	G5.931.5094.3

MST20i4, 4-pole

Flexible metal conduit

Color coding: ■ C4
Application: Mains 250 V + Emergency 20 A
Cross section of drop: 2.5 mm²

Length (m)	Part No.
0,5	G5.941.0593.4

MST20i4, 4-pole

Flexible metal conduit

Color coding: ■ C4
Application: Mains 250 V + Emergency 20 A
Cross section of drop: 4.0 mm²

Length (m)	Part No.
1,0	G5.941.1094.4
1,5	G5.941.1594.4
2,0	G5.941.2094.4
3,0	G5.941.3094.4
4,0	G5.941.4094.4

MST20i6, 6-pole

Flexible metal conduit

Color coding: ■ C8 LON
Application: Mains 250 V 20 A
Cross section of drop: 1.5 mm²

Length (m)	Part No.
0,5	G5.961.0592.8
1,0	G5.961.1092.8
1,5	G5.961.1592.8

Technical changes reserved

MST®, T DISTRIBUTORS

T distributors with pluggable output

TECHNICAL DATA

Rated voltage:	250 V / 250 V/400 V	Residual current device (RCD) must be used
Protection rating:	IP20	

MST20i3, 3-pole

Flexible metal conduit

Color coding: ☐C3
Application: Mains 250 V 20 A
Cross section of drop: 2.5 mm²

Length (m)	Part No.
0,5	G5.931.0503.3

MST20i3, 3-pole

Flexible metal conduit

Color coding: ☐C3
Application: Mains 250 V 20 A
Cross section of drop: 4.0 mm²

Length (m)	Part No.
0,5	G5.931.0504.3

MST20i4, 4-pole

Flexible metal conduit

Color coding: ■ L2
Application: Mains 250 V + E 20 A
Cross section of drop: 4.0 mm²

Length (m)	Part No.
0,5	G5.941.0504.C

MST20i5, 5-pole

Flexible metal conduit

Color coding: ■ C5
Application: DALI 250 V 20 A
Cross section of drop: 1.5 mm²

Length (m)	Part No.
0,5	G5.951.0502.5
1,0	G5.951.1002.5
1,5	G5.951.1502.5

MST®, T DISTRIBUTORS

T distributors with open end

TECHNICAL DATA		
Rated voltage:	250 V / 250 V/400 V	Residual current device (RCD) must be used
Protection rating:	IP20	

MST20i3, 3-pole

H05Z1Z1-F

Color coding: ☐ C3
Application: Mains 250 V 20 A
Cross section of drop: 1.5 mm²

Length (m)	Part No.
0,5	G5.936.0542.3
1,0	G5.936.1042.3
1,5	G5.936.1542.3

MST20i4, 4-pole

H05Z1Z1-F

Color coding: ■ C4
Application: Mains 250 V + emergency 20 A
Cross section of drop: 1.5 mm²

Length (m)	Part No.
0,5	G5.946.0542.4
1,0	G5.946.1042.4
1,5	G5.946.1542.4

MST20i5, 5-pole

H05Z1Z1-F

Color coding: ■ C5 DALI
Application: DALI 250 V 20 A
Cross section of drop: 1.5 mm²

Length (m)	Part No.
0,5	G5.956.0542.5
1,0	G5.956.1042.5
1,5	G5.956.1542.5

MST20i5, 5-pole

H05Z1Z1-F

Color coding: ■ C5 DALI
Application: DALI 250 V 20 A
Cross section of drop: 2x 1.5 mm²

Length (m)	Part No.
0,5	G5.926.0542.5
1,0	G5.926.1042.5
1,5	G5.926.1542.5
2,0	G5.926.2042.5

MST20i6, 6-pole

H05Z1Z1-F

Color coding: ■ C6
Application: DALI 250 V + emergency 20 A
Cross section of drop: 1.5 mm²

Length (m)	Part No.
0,5	G5.966.0542.6
1,0	G5.966.1042.6
1,5	G5.966.1542.6

Technical changes reserved

MST®, DISTRIBUTORS

T distributors with switchable output

TECHNICAL DATA			
Rated voltage:	250 V / 250/400V	Residual current device (RCD) must be used	
Protection rating:	IP20		

MST32i3, 3-pole

H05Z1Z1-F

		Length (m)	Part No.
Color coding:	■ C1	1,0	G5.536.0103.1
Application:	Mains 250 V 32 A	2,0	G5.536.0203.1
Cross section of drop:	2.5 mm², 10 A fuse		

MST20i3, 3-pole

H05Z1Z1-F

		Length (m)	Part No.
Color coding:	☐ C3	1,0	G5.536.0103.3
Application:	Mains 250 V 20 A	2,0	G5.536.0203.3
Cross section of drop:	2.5 mm², 10 A fuse		

H distributors

TECHNICAL DATA			
Rated voltage:	250 V / 250/400V	Protection rating:	IP20

H distributors

Color coding	Input	Output	Part No.
■ C7	1x	3x	G5.800.0023.7
■ C5	1x	3x	G5.800.0023.5

Switching distributors

TECHNICAL DATA			
Rated voltage:	250 V / 250/400V	Protection rating:	IP20

Switching distributors

Coding	Part No.
C6 input, C6 output, C6 LIGHT, C0 switching output	G5.800.0044.6
C6 input, C6 LIGHT, 2x C0 switching output	G5.800.0063.6
C4 input, C4 output, C4 LIGHT, C0 switching output	G5.800.0044.4
C4 input, C4 LIGHT, 2x C0 switching output	G5.800.0063.4

FACTS & DATA

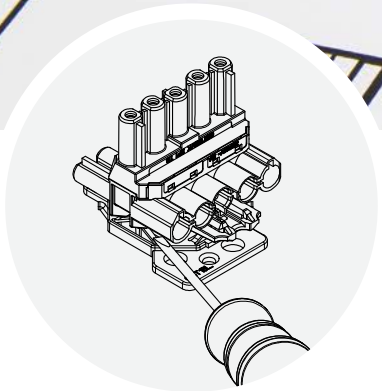

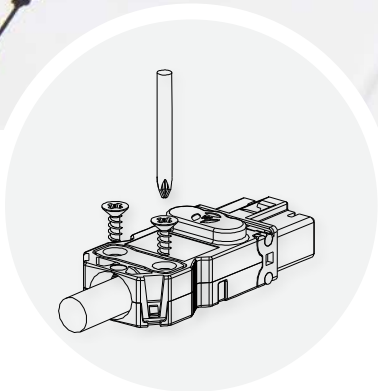

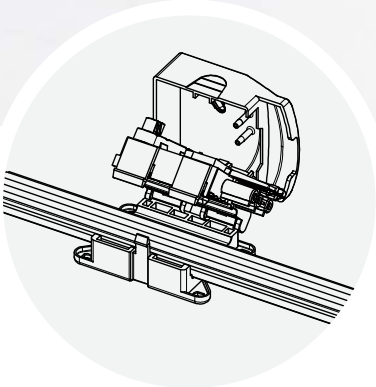

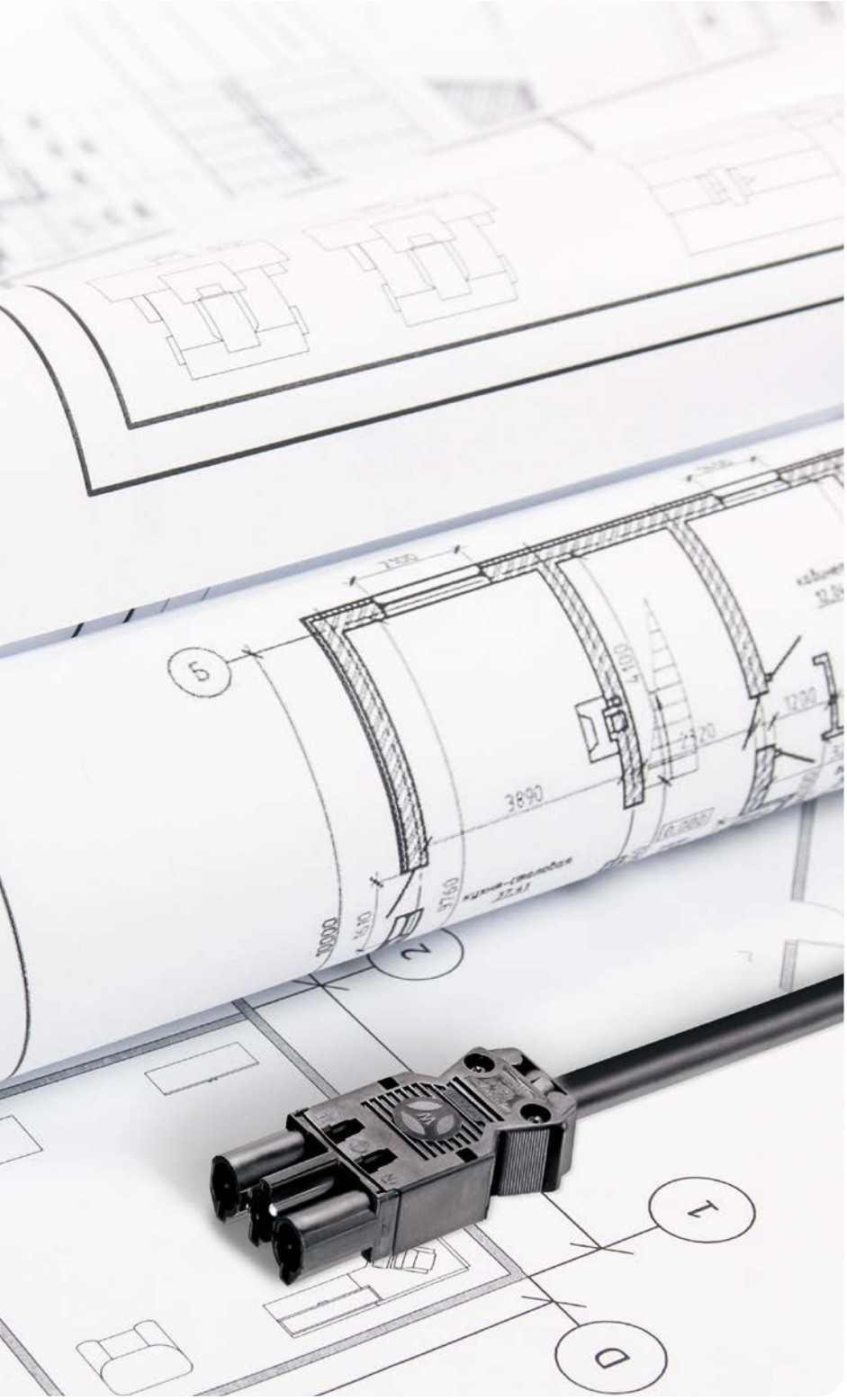

General technical data	192
Safety instructions	196
Installation instructions	
gesis® CLASSIC GST18®	204
gesis® MINI GST15	214
gesis® MICRO | GST08	218
gesis® NV | BST14	219
gesis® NRG	220
gesis® METALYNX² | MST	225
Technical data	226

GENERAL TECHNICAL DATA

Definition of our numerical code

A logical structure makes ordering easy

Our numerical code saves time and effort when ordering our cable assemblies. Your needs can be compiled quickly and efficiently. The way it works is simple and refers to our part numbers, which have a consistent structure. Your customized product can be ordered in just a few steps.

Example: 92.232.3000.1, cable 3-core, 1.5 mm², length 3.0 m, cable PVC H05VV-F, configuration male – female, code 1 (mains black)

			92.	232.	30	0	0.	1
Connector system								
	gesis® MINI	GST 15	**91.**					
	gesis® CLASSIC	GST 18®	**92.**					
	gesis® NV	BST14	**94.**					
Cable type and diameter								
Mains cable 2-core	0,75 mm²	GST15i2, GST18i3		**220.**				
Mains cable 2-core	1,0 mm²	GST15i2, GST18i3		**221.**				
Mains cable 2-core	1,5 mm²	GST15i2, GST18i3		**222.**				
Mains cable 3-core	0,75 mm²	GST15i3, GST18i3		**230.**				
Mains cable 3-core	1,0 mm²	GST15i3, GST18i3		**231.**				
Mains cable 3-core	1,5 mm²	GST15i3, GST18i3		**232./297.**				
Mains cable 3-core	2,5 mm²	GST18i3, GST15i3		**238./298.**				
Mains cable 3-core	4,0 mm²	GST18i3		**299.**				
Mains cable 4-core	1,5 mm²	GST15i4, GST18i4		**207.**				
Mains cable 4-core	2,5 mm²	GST18i4		**208.**				
Mains cable 5-core	0,75 mm²	GST18i5		**255.**				
Mains cable 5-core	1,0 mm²	GST18i5		**256.**				
Mains cable 5-core	1,5 mm²	GST18i5, GST15i5		**257.**				
Mains cable 5-core	2,5 mm²	GST18i5		**258.**				
Mains cable 5-core	4,0 mm²	GST18i5		**259.**				
Mains cable 6-core	1,5 mm²	GST18i6 (flat design)		**267.**				
Bus cable 2-core	0,5 mm²	BST14i2,		**425.**				
Bus cable 2x2-core	0,8 mm	BST14i2		**425.**				
Bus cable 2x2-core	0,8 mm	BST14i3		**435.**				
Length								
Length incl. female / male connector up to 10 m in dm (example: 3.0 m = 30 dm)					**30**			
Type of cable, material, and fire class								
H05VV-F, Eca		PVC				**0**		
H05V2V2-F, Eca		PVC, resistant up to constant temperature of 90°C				**1**		
H07RN-F, Eca		Rubber				**3**		
H05Z1Z1-F, Eca		Halogen-free				**6**		
H05Z1Z1-F, Dca		Halogen-free				**4**		
H05Z1Z1-F, Cca		Halogen-free				**5**		
H05Z1Z1-F, B2ca		Halogen-free				**7**		
Type of assembly								
Extension		Male - female					**0.**	
Extension		Male - female with shielding on PE					**2.**	
Connection cable		Female - free end					**3.**	
Connection cable		Male - free end					**4.**	
Connection cable		Female - free end with shielding on PE					**5.**	
Connection cable		Male - free end with shielding on PE					**6.**	
Mains connection cable		Safety male connector - female					**7.**	
Adapter cable		GST15 female - GST18® male					**9.**	
Colors and codings in the connector system								
tomato red		GST18i3 … i5						**0**
black		GST18i3 … i5, GST15i2 … i5, BST14i3						**1**
white		GST18i3 … i5, GST15i2 … i5						**2**
pebble gray		GST18i3 … i5, GST15i2						**3**
brown		GST18i3, GST15i3						**4**
salmon red		GST18i3						**5**
light blue		GST18i5, GST15i2						**6**
may green		GST18i3 … i5, GST15i4 ... GST15i5, BST14i2						**7**
turquoise		GST18i3 … i5, GST15i4 ... GST15i5						**8**
pastel blue		GST18i3, GST18i5, GST15i2, GST15i5, BST14i2						**9**
pastel blue/black		GST18i6						**1**

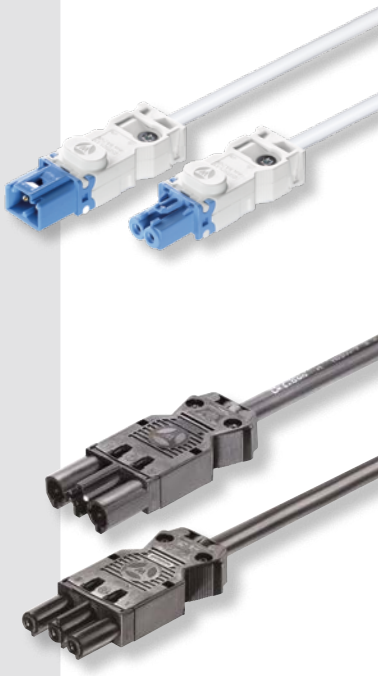

GENERAL TECHNICAL DATA

Example: 90.210.1020.1, cable 2-core, 0.75 mm², length 1.0 m, cable PVC H03V2V2H2-F, configuration male – female, code 3 (green)

			90.	210.	10	2	0.	1
Connector system								
	gesis® MICRO	GST08	**90.**					
Cable type and diameter								
Mains cable 2-core	0.75 mm² / blue	GST08i2		**200.**				
Mains cable 2-core	0.75 mm² / green	GST08i2		**210.**				
Mains cable 2-core	0.5 mm² / green	GST08i2		**215.**				
Mains cable 2-core	0.75 mm² / yellow	GST08i2		**220.**				
Mains cable 2-core	0.75 mm² / white	GST08i2		**230.**				
Mains cable 3-core	0.75 mm² / white	GST08i3		**240.**				
Length								
Length incl. female / male connector up to 10 m in dm (example: 3.0 m = 30 dm)					**30**			
Cable type, material								
H03VV-F		PVC				**0**		
H03VVH2-F		PVC				**1**		
H03V2V2H2-F		PVC, resistant up to constant temperature of 90°C				**2**		
H03Z1Z1H2-F		Halogen-free				**4**		
LiYZ		PVC				**3**		
Type of assembly								
Extension		Male - female					**0.**	
Connection cable		Female - free end					**3.**	
Connection cable		Male - free end					**4.**	
Mains connection cable		Female - safety / European flat male connector					**2.**	
Mains connection cable		Male - safety / European flat coupling					**8.**	
Adapter cable		GST08 female - GST15 male					**5.**	
Distributor cable		Male - distributor					**6.**	
Distributor cable		Free end - distributor					**7.**	
Distributor cable		Distributor - safety / European flat male connector					**9.**	
Cable color								
black								**1**
white								**2**

Example: G5.431.1506.1, configuration male – free end, 3-pole, metal hose cable, length 15.0 m, 6.0 mm², coding 3-pole, 32 A, 250 V

			G5.	4	3	1.	150	6.	1
Connector system									
	gesis® METALYNX®	MST®	**G5.**						
Type of assembly									
Extension	Male - female			**0**					
Connection cable	Female - free end			**3**					
Connection cable	Male - free end			**4**					
Number of poles									
3					**3**				
4					**4**				
5					**5**				
6					**6**				
Cable type, material									
Metal hose						**1.**			
H05VV-F		PVC				**2.**			
Plastic hose						**3.**			
H05Z1Z1-F		Halogen-free				**6.**			
Length									
Length incl. female / male connector up to 100 m in dm (example: 15.0 m = 150 dm)							**150**		
Connector cross section									
1,5 mm²								**2.**	
2,5 mm²								**3.**	
4,0 mm²								**4.**	
6,0 mm²								**6.**	
Coding									
C1	3-pole, 32 A, 250 V								**1**
C2	4-pole, 25 A, 250 V								**2**
C3	3-pole, 20 A, 250 V								**3**
C4	4-pole, 20 A, 250 V								**4**
C5	5-pole, 20 A, 250 V + non-SELV								**5**
C6	6-pole, 20 A, 250 V								**6**
C7	5-pole, 20 A, 250/400 V								**7**
C8	3-pole + SELV data cable								**8**

GENERAL TECHNICAL DATA

General

Cable cross sections / AWG

The approximated relationship between cable cross sections in mm² and AWG sizes is defined as follows:

AWG	Cross section mm²	Metric equivalent mm²
22	0,32	0,34
20	0,52	0,75
18	0,82	1,0
16	1,31	1,5
14	2,08	2,5
12	3,31	4,0
10	5,26	6,0
8	8,37	10,0
6	13,3	16,0

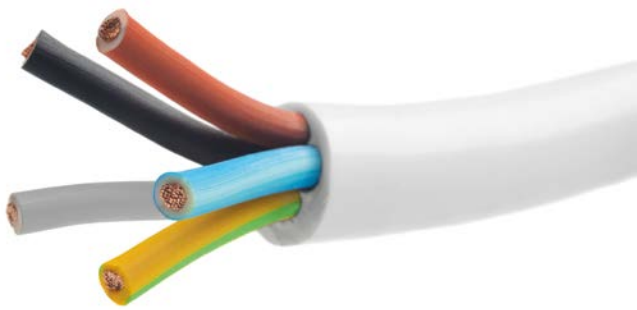

Non-SELV systems:
When laying mains and signal cables together, the highest occurring supply voltage must be coordinated (250 V, as a rule).
Examples include SMI and DALI. There must be no possible confusion with SELV, PELV, and FELV.

SELV / PELV systems:
The GST18® light blue, GST15 light blue (e.g. the binary inputs of the gesis® FLEX), and BST14i2 (e.g. KNX) connector systems must be used as plug connectors for SELV/PELV systems.
There must be no possible confusion with FELV and mains-like systems.

Mains-like systems:
Components must be laid out as per mains voltage. Examples include Touch DIM and SMI pushbutton mode. There must be no possible confusion with SELV, PELV, and FELV.

Pollution severity info:
Connectors from Wieland that are type-tested as per EN 61535 can be used in equipment with protection class II meeting pollution degree 2. They fulfill the requirements of protection class II of the next higher overvoltage category for clearances (6 kV).
Assembly parts have to provide contact protection for double or reinforced insulation.
The relevant technical standards must be observed.
We recommend using the product families GST18®, GST15, RST20, and RST16.

- **gesis® products are not generally suitable for use in chlorine-containing environments. Components with spring force (e.g. snap-in and field connection) cannot be used. We recommend field connections and snap-ins with screw termination or products in the RST® range in screw termination. These must be closed with suitable caps when not in use.**
- **Suitability for use in aggressive environments (ammonia, ozone, salty air) must be inquired about separately.**

GENERAL TECHNICAL DATA

Overview of free ends, wire colors, and pole assignments

Configurations of free ends with cable assemblies::

	Sheath strip length	Insulation strip length
GST18®: Standard	37 mm	9 mm
GST18®: Coding brown	100 mm	12 mm
GST15: Standard	21 mm	8 mm
GST15: Coding brown	100 mm	12 mm
GST08i2 0,5 mm²	15 mm	7 mm
GST08i2 0,75 mm²	21 mm	7 mm
GST08i3	25 mm	7 mm
BST14	21 mm	9 mm

This pole assignment is also our recommendation for the plug connector / device connector connection executed by the customer.

BST14i2	
Standard	1 (+) = red, 2 (-) = black
GST15i2 / GST08i2	
Standard	N=blue, L=brown
Special variant pastel blue coding	D2=blue, D1=brown
GST18i3 / GST15i3 / GST08i3	
Standard	PE=green/yellow, N=blue, L=brown
Special variant brown coding	1=black; 2=gray; 3=brown available on request with 2=blue
Special variant may green coding	1=brown, N/2=blue, PE=green/yellow
Special variant pastel blue and turquoise coding	1=black, 2=blue, 3=brown
GST18i4 / GST15i4	
Standard	PE=green/yellow, N=blue, 1=brown, 2=black
Special variant may green coding	1=brown, PE=green/yellow, N/2=blue, 3=black
Special variant turquoise coding	1=brown, N/2=blue, 3=black, 4=gray
GST18i5 / GST15i5	
Standard	PE=green/yellow, N=blue, 1=brown, 2=black, 3=gray
Special variant pastel blue coding	PE=green/yellow, N=blue, L=brown, D2=black, D1=gray
Special variant pastel blue coding for UK	PE=green/yellow, N=blue, L=brown, D2=white, D1=red
Special variant may green coding	1=brown, 2=black, PE=green/yellow, 3/N=blue, 4=gray
Special variant turquoise coding	1=gray, 2=black 1, 3=black 2, 4/N=blue, 5=brown
Special variant light blue coding	1=gray, 2=black 1, 3=black 2, 4/N=blue, 5=brown
GST18i6	
Standard	PE=green/yellow, N=blue, L=brown, L'=black, D1=red, D2=white
MST®	
MST32i3 C1, MST20i3 C3	PE=green/yellow, N=blue, L=brown
MST25i4 C2	PE=green/yellow, N=blue, 1=brown, 2=black
MST20i4 C4	N=blue, PE=green/yellow, 1=brown, 2=red
MST20i5 C5	N=blue, PE=green/yellow, 1=brown, 3=red, 4=white
MST20i6 C6	N=blue, PE=green/yellow, 1=brown, 2=red, 3=gray, 4=black
MST20i5 C7	PE=green/yellow, N=blue, 1=brown, 2=black, 3=gray
MST20i6 C8	N=blue, PE=green/yellow, 1=brown, 2=black, S=shielding, 3=white
NRG	
NRG wire assignment matches the relevant connector system of the output adapter	

NRG 2.5/4 mm²
mains 250/400 V

NRG 2.5/4 mm²
mains 250 V + non-SELV

NRG 2.5/4 mm²
mains 250/400 V + (non-)SELV

NRG 10 mm²
mains 250/400 V

SAFETY INSTRUCTIONS

Risk avoidance

The use of identical codings with different labeling and/or color marking is permissible provided that there is absolutely no possibility of any dangerous connection between female and male connectors.

The installer / planner must ensure and assume responsibility for ensuring that there can be no mix-up resulting in a dangerous situation. One way of achieving this, with different voltage levels, is through physical separation during the on-site installation.

Corresponding warnings are required in the technical documentation. These must include examples of possible errors and their consequences.

PLEASE NOTE THAT IF MALE AND FEMALE CONNECTORS ARE CONNECTED WRONGLY, DANGEROUS SITUATIONS SUCH AS

+ VOLTAGE TRANSFER
+ RISK OF ELECTRIC SHOCK
+ DESTRUCTION OF EQUIPMENT

MAY OCCUR AS A RESULT.

General rule: The erection, extension, and modification of electrical installations may only be carried out by qualified electricians. Installation plug connectors to IEC 61535 (e.g. GST18®, GST15, MST®) are intended for installation by persons trained in electrical engineering. Applicable installation instructions as well as accident prevention and safety regulations must be observed.

Rules to be observed during installation:

Every color of the installation plug connectors stands for a specific mechanical coding. Only female and male connectors with the same color can be mated. The only exception to this rule are black/white or gray/tomato red plug connectors, which have the same coding. In accordance with the installation instructions, interlocking devices must always be used.

These are integrated in GST18® distributors (with the exception of the outlets of T and h distributors) and snap-in plug connectors. In cable assemblies with flying leads, plug connectors, soldered parts, or flat cable adapters of old systems, interlocks have to be retrofitted manually (see Accessories). The interlocking device must click audibly into place to guarantee safe contact.

All GST15, NRG, and MST® components are always fitted with interlocks, so these do not have to be retrofitted.

Connection and termination points, as well as plug-in connections of cables/conductors, have to be provided with mechanical strain relief as per VDE0100-520.

Never use force to plug or unplug gesis® connectors. To open interlocking devices, use a tool such as a suitable screwdriver; the connectors can then be unplugged easily.

Never connect or disconnect connectors under load. Do not use third-party components. The warranty only extends to original Wieland parts.

The use of an RCD is mandatory in the MST® system.

For all types of device connector (snap-in, built-in part, soldered part), the following should be noted: For a plug connector that is not enclosed, protection against electric shocks is provided by the housing of the equipment in which the connector is installed, in accordance with the applicable product safety standard.

SAFETY INSTRUCTIONS

Coding

NOT PERMITTED:

The use of different plug connectors with the same coding and different assignments is not permitted as this may result in hazardous mismating.

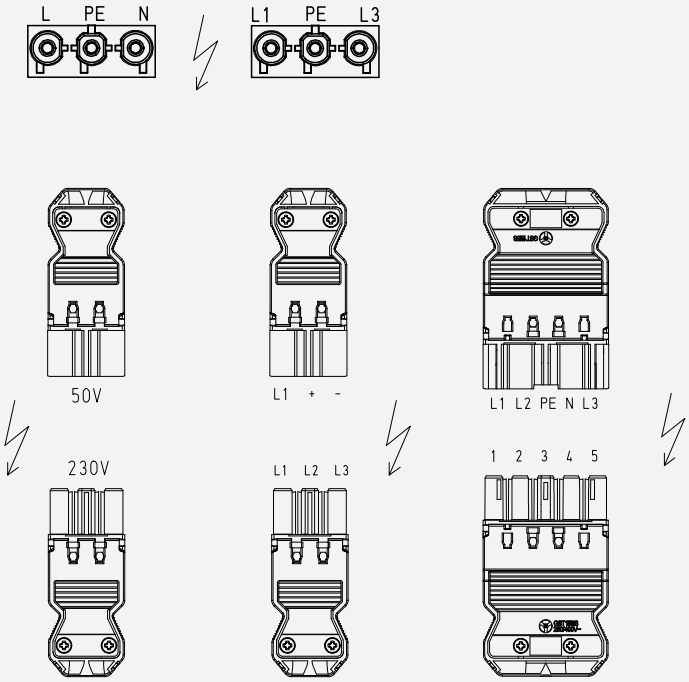

PERMITTED:

Hazardous mismating can be prevented by spatially separating plug connectors with the same coding and a different assignment, so this assignment becomes permissible.
To avoid any danger in the long term we recommend that identical assignments are always chosen within a building.

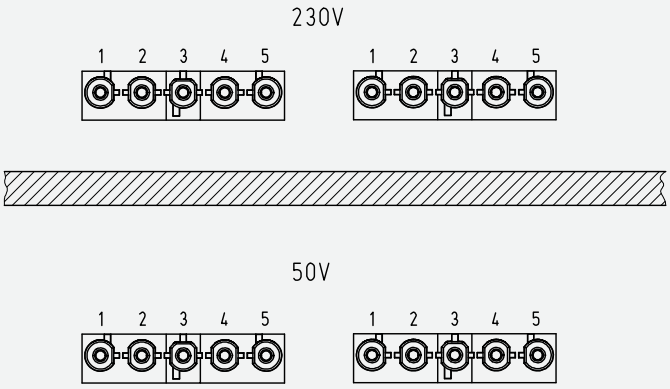

SAFETY INSTRUCTIONS

GST18® | gesis® CLASSIC

According to IEC 61535, installation plug connectors must only be connected and disconnected without load.

According to the installation instructions, the live component MUST be a female connector.

Never disconnect gesis® connectors using force.

All gesis® components must only be installed, commissioned, and serviced by trained electricians.

According to VDE 0100, only qualified electricians or persons trained in electrical engineering are permitted to use installation plug connectors.

Female connectors are protected against contact even when unplugged if used in an area that is not easily accessible.

When using GST18® connectors in easily accessible areas, caps or covers that can only be removed with a tool must be used (see Accessories).

Compliance with EN 61535 will not automatically prevent dangerous confusion between the installation plug connector systems of different manufacturers. Compatibility with third-party products cannot be guaranteed.

Never use components from third-party manufacturers. No guarantee shall be offered for damage resulting from a combination with third-party components.

Installation plug connectors are not a replacement for national plug/socket systems for home use. There is no danger of confusion with systems based on IEC 60309, IEC 60320, or IEC 60906 or with national plug and socket systems for home use.

Never tamper with the cables and components! Observe applicable accident prevention and safety regulations.

Damaged products may neither be installed nor operated.

The Wieland coding concept provides for the allocation of codings and colors to each application. The applications are described in this catalog. When using codings for other applications, the user must ensure that there is no danger of confusion. Check for differing technical data, if applicable.

The relevant standards, guidelines, regulations, and provisions of the respective country must be observed.

Protective measures and mechanisms must correspond to applicable regulations.

The ground conductor is protruding, if it exists.

Our GST18i3 PVC cable assemblies with a diameter of 1.5 mm², built-in parts and snap-ins are also approved according to DIN EN 60320.

Safety instructions for power strips with GST18i3 input and output:

According to VDE 0620-1, connecting mobile outlets in series is not permissible, as safe miniature circuit breaker function cannot be ensured. This is also valid for the multiple outlets with GST18® input and output shown here.

When using our multiple outlets in a fixed installation, e.g. in desks, cable ducts, shelves, etc., they may be connected in series subject to observance of the overall connected load of 3,500 W, maximum power of 16 A, and the maximum admissible cable length for the respective installation.

SAFETY INSTRUCTIONS

GST15 | gesis® MINI

According to IEC 61535, installation plug connectors must only be connected and disconnected without load.

According to the installation instructions, the live component MUST be a female connector.

Never disconnect gesis® connectors using force.

All gesis® components must only be installed, commissioned, and serviced by trained electricians.

According to VDE 0100, only qualified electricians or persons trained in electrical engineering are permitted to use installation plug connectors.

Female connectors are protected against contact even when unplugged if used in an area that is not easily accessible.

Open GST15 female connectors are not permitted in areas that are easily accessible.

Compliance with EN 61535 will not automatically prevent dangerous confusion between the installation plug connector systems of different manufacturers. Compatibility with third-party products cannot be guaranteed.

Never use components from third-party manufacturers. No guarantee shall be offered for damage resulting from a combination with third-party components.

Installation plug connectors are not a replacement for national plug/socket systems for home use. There is no danger of confusion with systems based on IEC 60309, IEC 60320, or IEC 60906 or with national plug and socket systems for home use.

Never tamper with the cables and components! Observe applicable accident prevention and safety regulations.

Damaged products may neither be installed nor operated.

The Wieland coding concept provides for the allocation of codings and colors to each application. The applications are described in this catalog.
When using codings for other applications, the user must ensure that there is no danger of confusion. Check for differing technical data, if applicable.

The relevant standards, guidelines, regulations, and provisions of the respective country must be observed.

Protective measures and mechanisms must correspond to applicable regulations.

The ground conductor is protruding, if it exists.

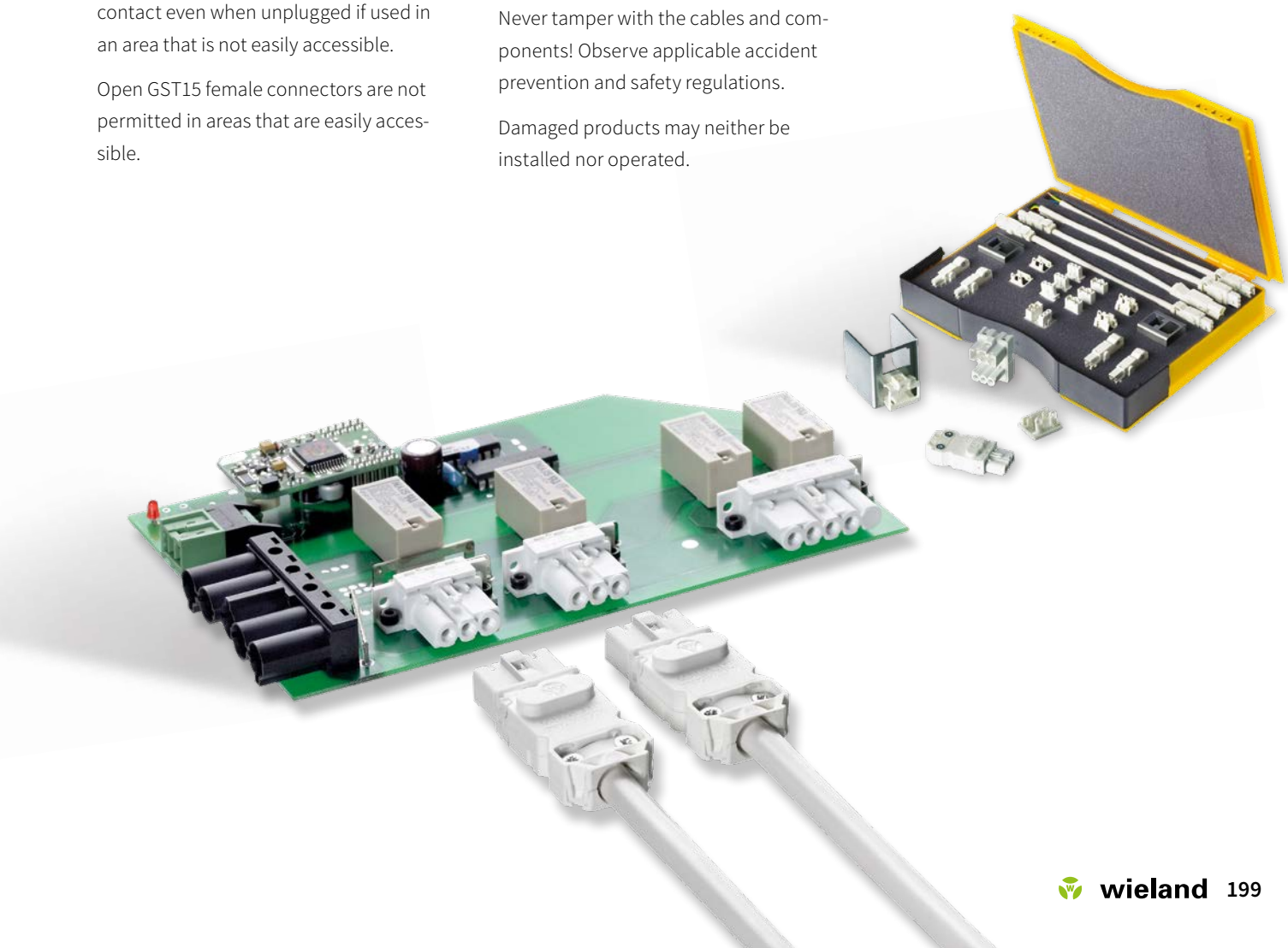

SAFETY INSTRUCTIONS

GST08 | gesis® MICRO

gesis® MICRO (GST08) is not intended for use in fixed installations as per IEC 61535.

According to the installation instructions, the live component MUST be a female connector.

When using adapter cables for connection to GST15 or GST18®, the circuit must be fused for the rated current of the GST08 components!

Connectors must only be connected and disconnected without load.

All gesis® components must only be installed, commissioned, and serviced by trained electricians.

According to VDE 0100, only qualified electricians or persons trained in electrical engineering are permitted to use installation plug connectors.

Female connectors are protected against contact even when unplugged if used in an area that is not easily accessible.

Never use components from third-party manufacturers. No guarantee shall be offered for damage resulting from a combination with third-party components.

GST08 plug connectors are not a replacement for national plug/socket systems for home use. There is no danger of confusion with systems based on IEC 60309, IEC 60320, or IEC 60906 or with national plug and socket systems for home use.

Never tamper with cables and components! Observe applicable accident prevention and safety regulations.

Damaged products may neither be installed nor operated.

The Wieland coding concept provides for the allocation of codings and colors to each application. The applications are described in this catalog. When using codings for other applications, the user must ensure that there is no danger of confusion. Check for differing technical data, if applicable.

The relevant standards, guidelines, regulations, and provisions of the respective country must be observed.

Protective measures and mechanisms must correspond to applicable regulations.

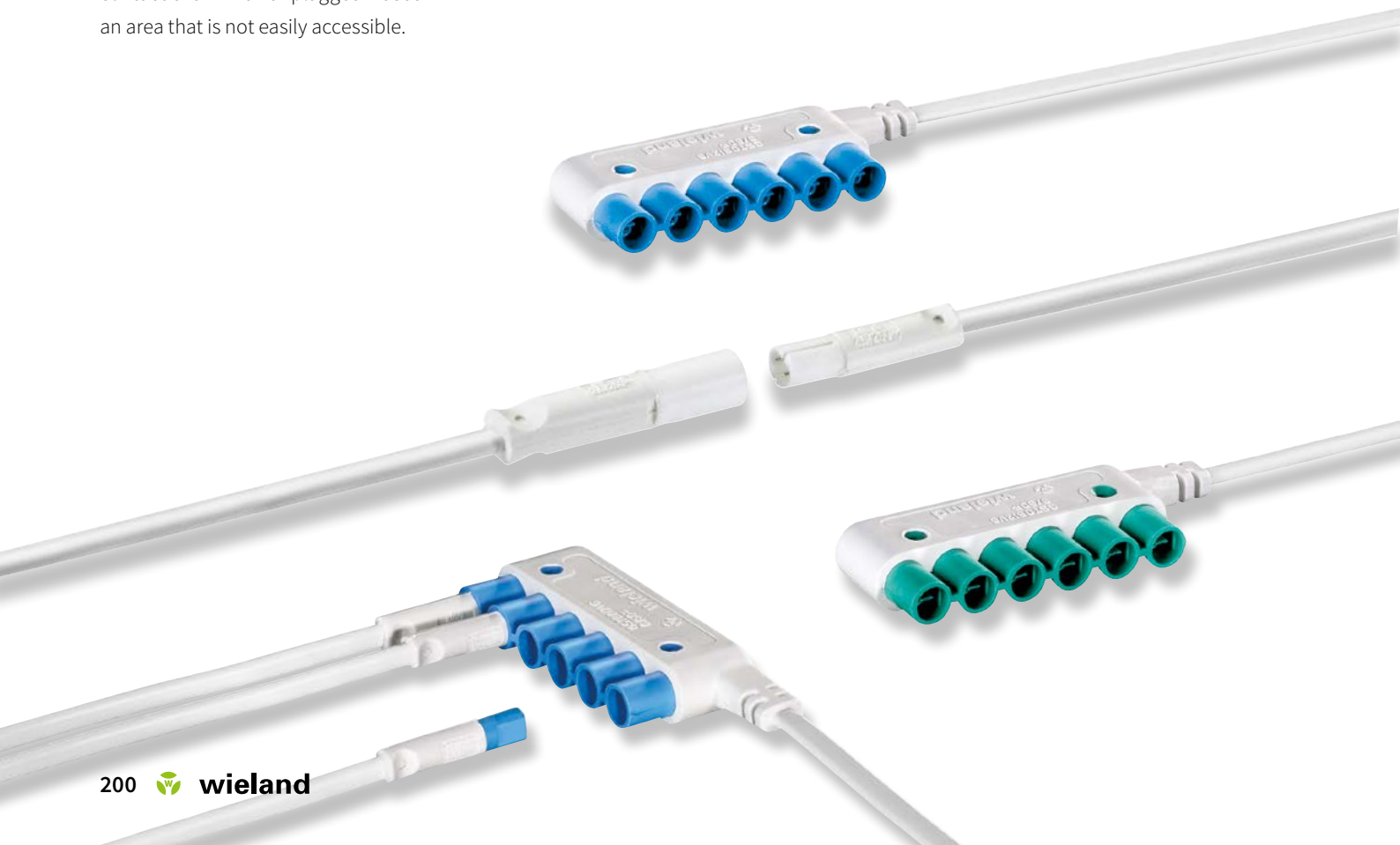

SAFETY INSTRUCTIONS

BST14 | gesis® NV

Use BST14 plug connectors only in connection with a SELV or PELV voltage supply!

According to the installation instructions, the live component MUST be a female connector.

Connectors must only be connected and disconnected without load.

All gesis® components must only be installed, commissioned, and serviced by trained electricians.

According to VDE 0100, only qualified electricians or persons trained in electrical engineering are permitted to use installation plug connectors.

For non-SELV systems, unused connectors must be closed with covers.

Never use components from third-party manufacturers. No guarantee shall be offered for damage resulting from a combination with third-party components.

BST14 plug connectors are not a replacement for national plug/socket systems for home use. There is no danger of confusion with systems based on IEC 60309, IEC 60320, or IEC 60906 or with national plug and socket systems for home use.

Never tamper with the cables and components! Observe applicable accident prevention and safety regulations.

Damaged products may neither be installed nor operated.

The Wieland coding concept provides for the allocation of codings and colors to each application. The applications are described in this catalog. When using codings for other applications, the user must ensure that there is no danger of confusion. Check for differing technical data, if applicable.

The relevant standards, guidelines, regulations, and provisions of the respective country must be observed.

Protective measures and mechanisms must correspond to applicable regulations.

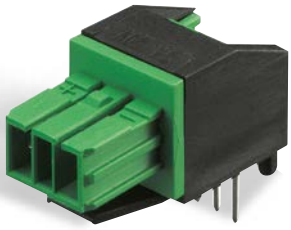

SAFETY INSTRUCTIONS

gesis® NRG

Never connect or disconnect plug connectors, or assemble or dismantle adapters, under load.

Never disconnect gesis® connectors using force.

Only open the covers of gesis® NRG components when they are not energized.

All gesis® components must only be installed, commissioned, and serviced by trained electricians.

According to VDE 0100, only qualified electricians or persons trained in electrical engineering are permitted to use installation plug connectors.

Female connectors are protected against contact even when unplugged if used in an area that is not easily accessible.

Compatibility with third-party products cannot be guaranteed. Never use components from third-party manufacturers. No guarantee shall be offered for damage resulting from a combination with third-party components.

Never tamper with the cables and components! Observe applicable accident prevention and safety regulations.

Damaged products may neither be installed nor operated.

The Wieland coding concept provides for the allocation of codings and colors to each application. The applications are described in this catalog. When using codings for other applications, the user must ensure that there is no danger of confusion. Check for differing technical data, if applicable.

The relevant standards, guidelines, regulations, and provisions of the respective country must be observed.

Protective measures and mechanisms must correspond to applicable regulations.

The ground conductor is protruding, if it exists.

Connection and termination points, as well as plug-in connections of cables/conductors, must be provided with mechanical strain relief as per VDE 0100-520.

Explicitly for NRG 5+2 BASIC+SELV (bus shielded):
Bus system components must be chosen in compliance with SELV.

The bus cable with shielding is only suitable for use with SELV applications.

Explicitly for NRG 2.5/4 mm²:
The voltage (feed) is supplied to the flat cable with a screwable flat cable adapter. The output boxes can be adapted using insulation-piercing screw technology. The outputs themselves are pluggable using gesis® connector systems.

The connectors must be locked together with the adapter.

Functional safety can only be guaranteed if the original cable is used.

Explicitly for NRG 10 mm²:
The voltage (feed) is supplied to the flat cable with terminal blocks.

The output boxes are executed with insulation-piercing screw technology and fixed connection.

Functional safety can only be guaranteed if the original cable is used.

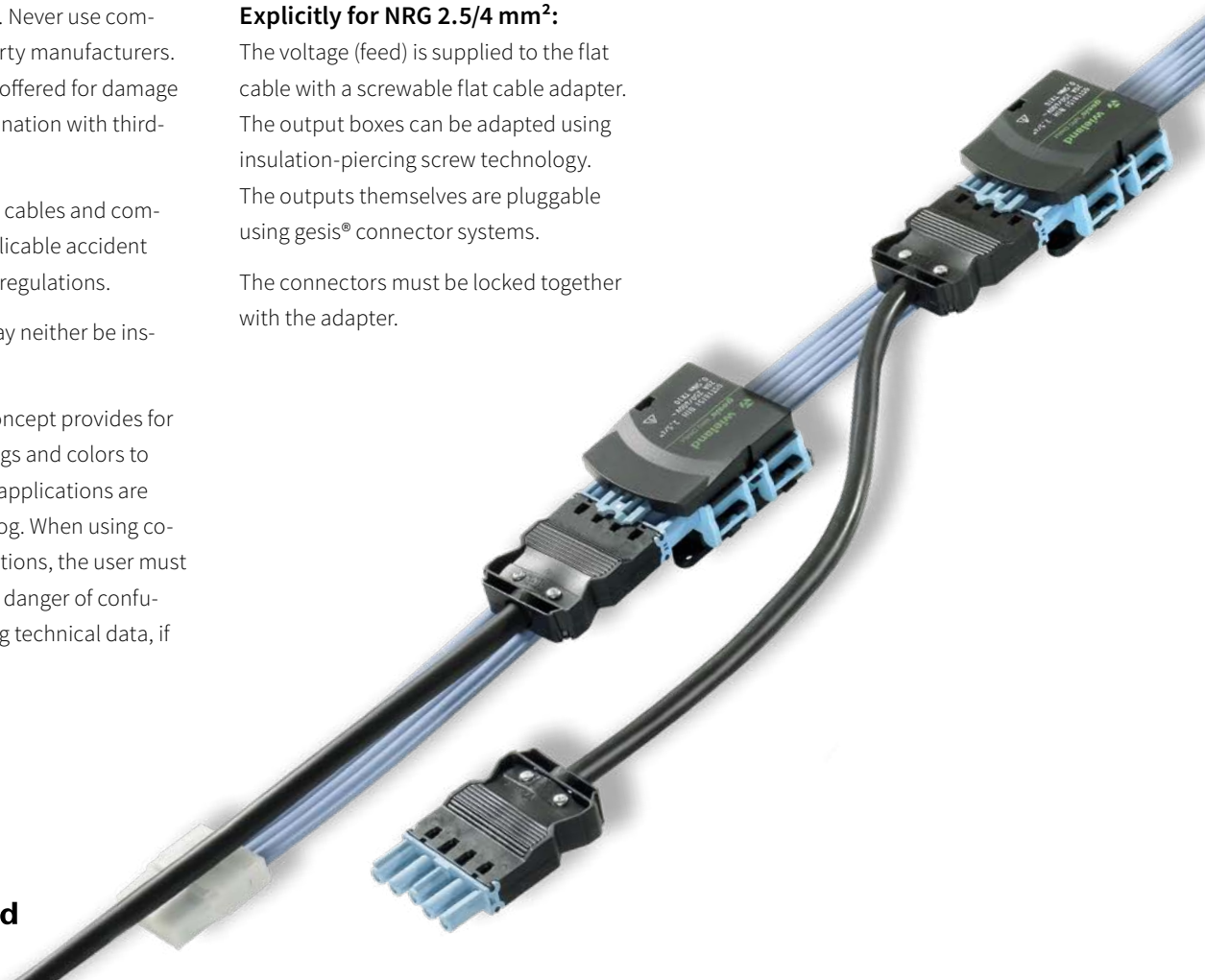

SAFETY INSTRUCTIONS

MST® | gesis® METALYNX²

According to IEC 61535, installation plug connectors must only be connected and disconnected without load.

Never disconnect gesis® connectors using force.

All gesis® components must only be installed, commissioned, and serviced by trained electricians.

According to VDE 0100, only qualified electricians or persons trained in electrical engineering are permitted to use installation plug connectors.

Female connectors are protected against contact even when unplugged if used in an area that is not easily accessible.

When using MST® connectors in easily accessible areas, caps or covers that can only be removed with a tool must be used (see Accessories).

Compliance with EN 61535 will not automatically prevent dangerous confusion between the installation plug connector systems of different manufacturers. Compatibility with third-party products cannot be guaranteed.

Never use components from third-party manufacturers. No guarantee shall be offered for damage resulting from a combination with third-party components.

Installation plug connectors are not a replacement for national plug/socket systems for home use. There is no danger of confusion with systems based on IEC 60309, IEC 60320, or IEC 60906 or with national plug and socket systems for home use.

Never tamper with the cables and components! Observe applicable accident prevention and safety regulations.

Damaged products may neither be installed nor operated.

The Wieland coding concept provides for the allocation of codings and colors to each application. The applications are described in this catalog. When using codings for other applications, the user must ensure that there is no danger of confusion. Check for differing technical data, if applicable.

The relevant standards, guidelines, regulations, and provisions of the respective country must be observed.

An open female connector is the start of a cable run.

Protective measures and mechanisms must correspond to applicable regulations.

The use of RCDs is mandatory when using cables with a metal hose.

The ground conductor is protruding, if it exists.

GST18i3…i6 INSTALLATION INSTRUCTIONS

Plug connectors with **screw connection**

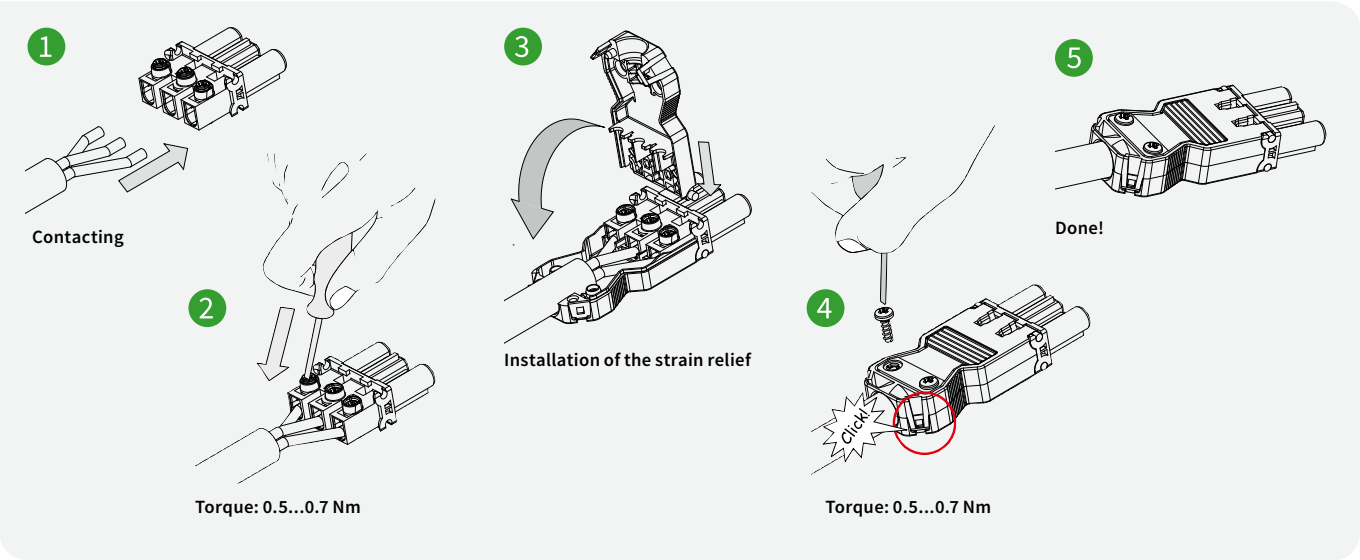

Proceed in the same way for 4 and 5-pole connectors.
Mind the correct pole assignment.

Preparing the conductors

Solid and fine-stranded wires 0.75 ... 1.5 mm² can be connected with or without a ferrule.
4 mm² can only be connected with high strain relief; a ferrule cannot be used.

STANDARD STRAIN RELIEF

GST18i3

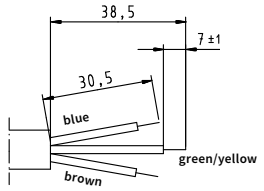

GST18i5

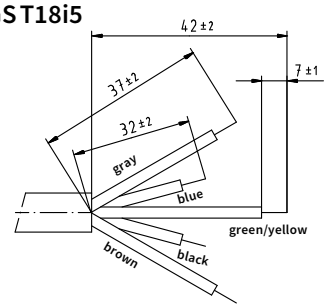

GST18i4

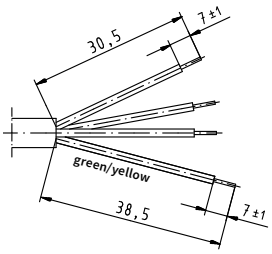

GST18i6

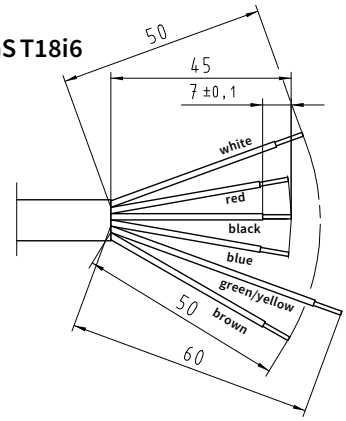

HIGH STRAIN RELIEF

GST18i3

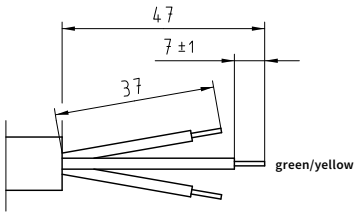

GST18i5

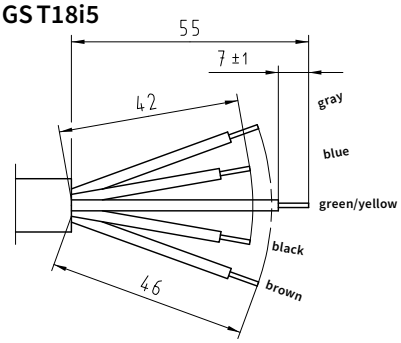

All information in mm.

GST18i3…i4 INSTALLATION INSTRUCTIONS

Plug connectors with **spring clamp connection**

ONE CABLE

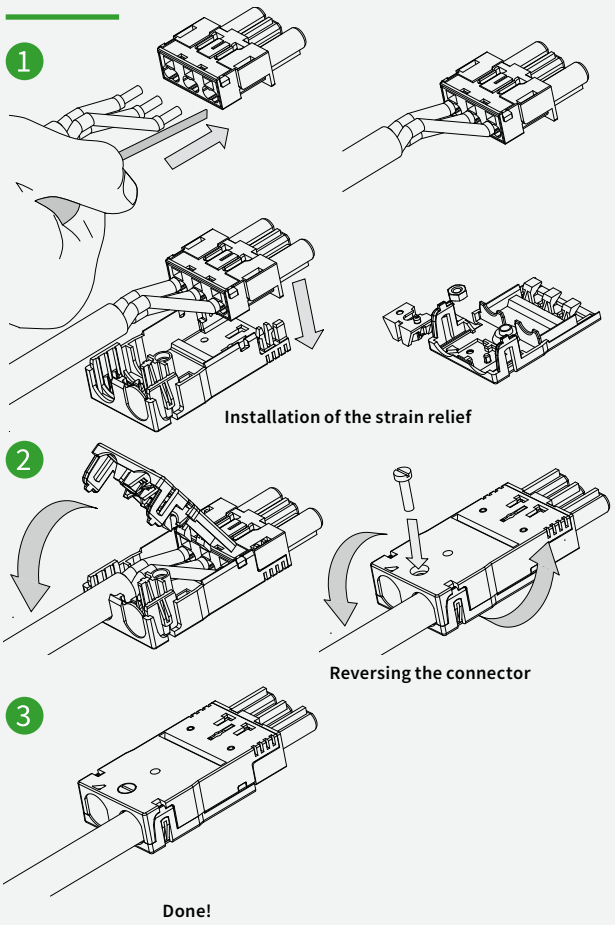

Proceed in the same way for 4-pole connectors.
Mind the correct pole assignment.

TWO CABLES

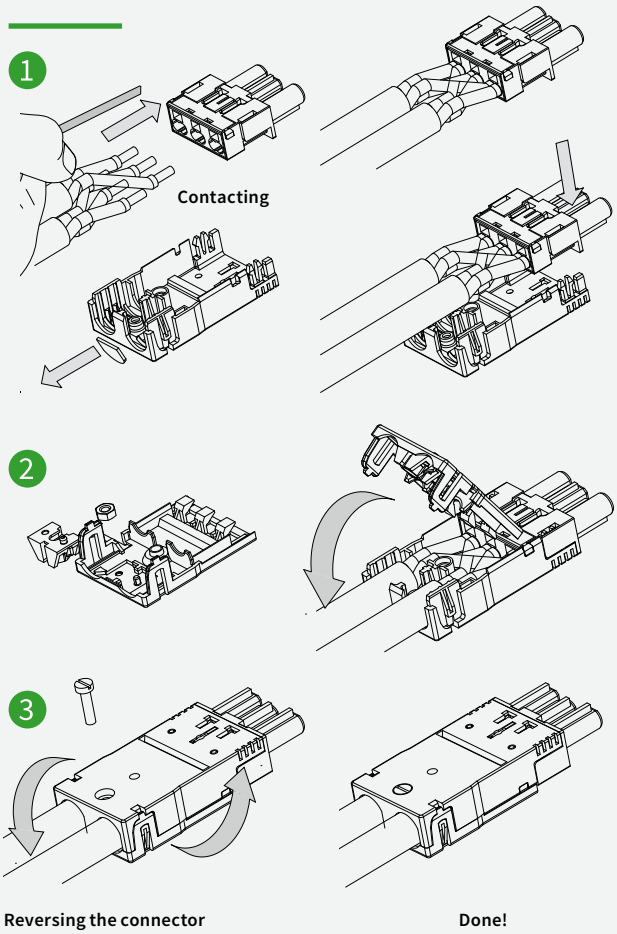

Proceed in the same way for 4-pole connectors.
Mind the correct pole assignment.

Preparing the conductors

Solid wires 0.75 – 2.5 mm².
Fine-stranded wires 0.75 – 1.5 mm² with a ferrule.

ONE CABLE

GS T18i3

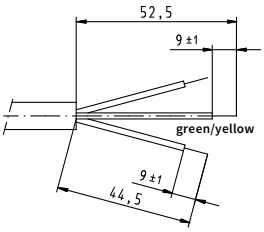

GS T18i4

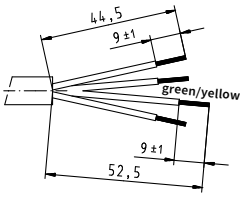

TWO CABLES

GS T18i3

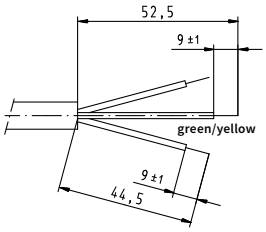

GS T18i4

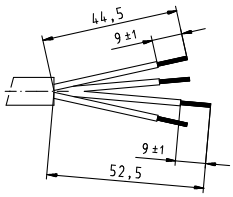

All information in mm.

GST18i3…i6 INSTALLATION INSTRUCTIONS

General overview of GST18® optional slidelocks

The use of an interlocking device is normatively prescribed. With GST18®, the interlocks can only be opened with a tool, so this connector system can also be used in areas that are easily accessible. With certain components of the installation plug connector system, separate slidelocks from the accessories must be used.

CONNECTORS

Individually or as a cable assembly, plug connectors are always executed without an interlocking device. An additional interlock is needed if the counterpart does not have an interlocking device.

SOLDERED PARTS

Always executed without an interlocking device. An additional interlock is needed if the counterpart does not have an interlocking device.

DISTRIBUTORS

Always executed with an interlocking device. There is no need for an additional interlock on a plug connector.
As an exception, the outputs of T and h distributors are executed without an interlocking device. These outputs are therefore suitable for plugging directly into a snap-in or for cascading multiple distributors.

SNAP-IN

Always executed with an interlocking device. There is no need for an additional interlock on the counterpart.

BUILT-IN PARTS

Always executed without an interlocking device. An additional interlock is needed if the counterpart does not have an interlocking device.

Example: Connecting two H distributors with a cable assembly does not require any additional interlocks from the accessories. Connecting, for example, a luminaire and the output of a T distributor with a cable assembly requires an additional interlock on the plug connector which is connected to the output of the T distributor.

Interlocking device with screw connection | Spring clamp connection

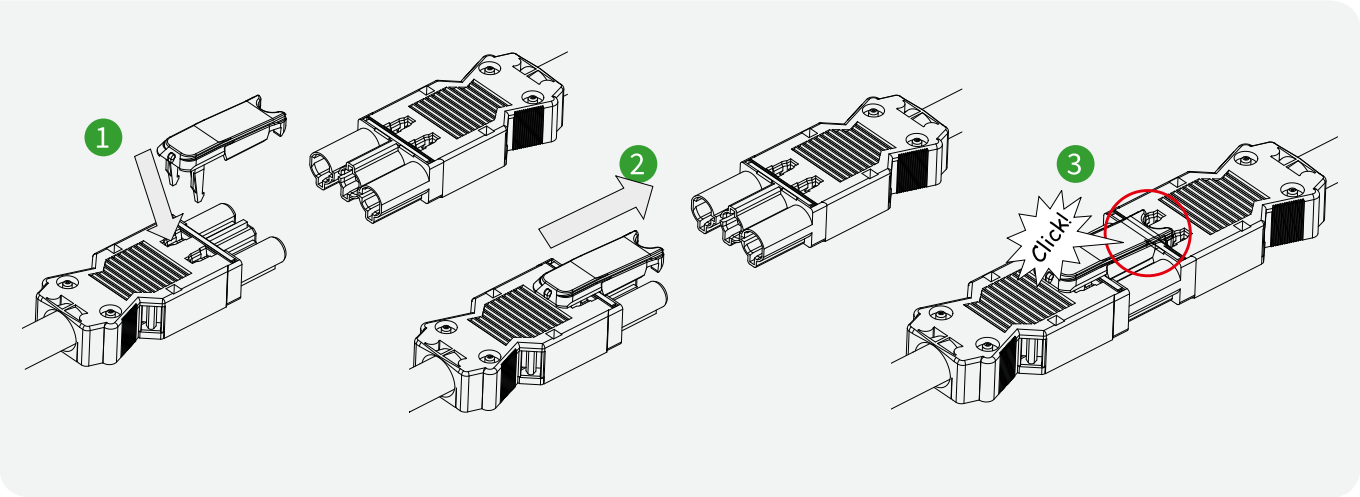

Proceed in the same way for distributors, snap-ins, and soldered parts.

GST18i3…i6 INSTALLATION INSTRUCTIONS

Drilling patterns I soldered parts horizontal

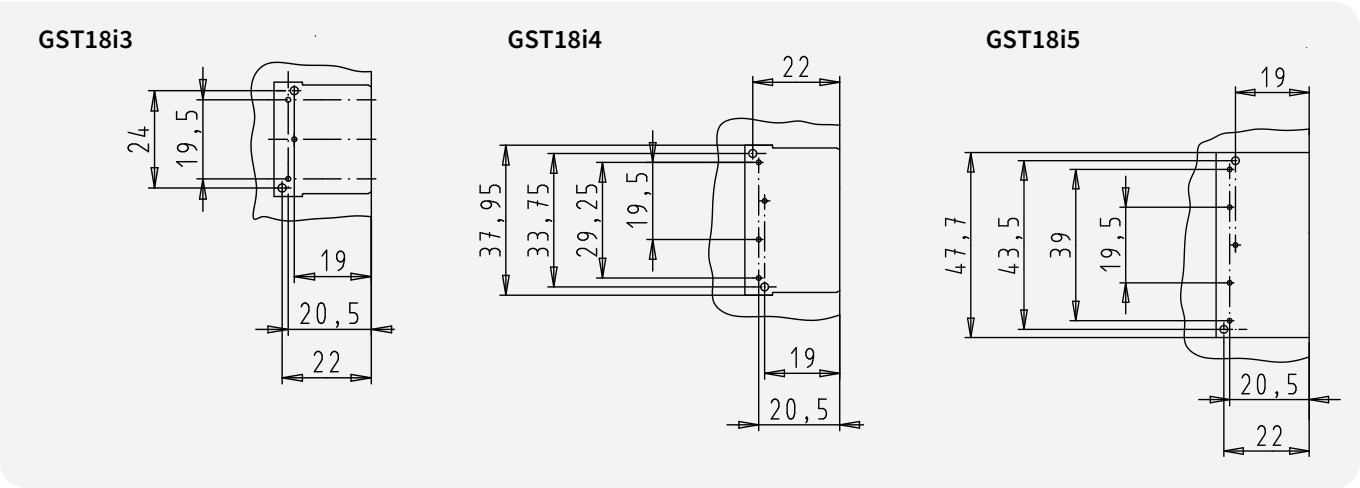

Snap-in installation

Insulation strip length 0.5 - 1.5 mm²: 8 mm; insulation strip length 2.5 mm²: 9 mm | Identical for built-in parts

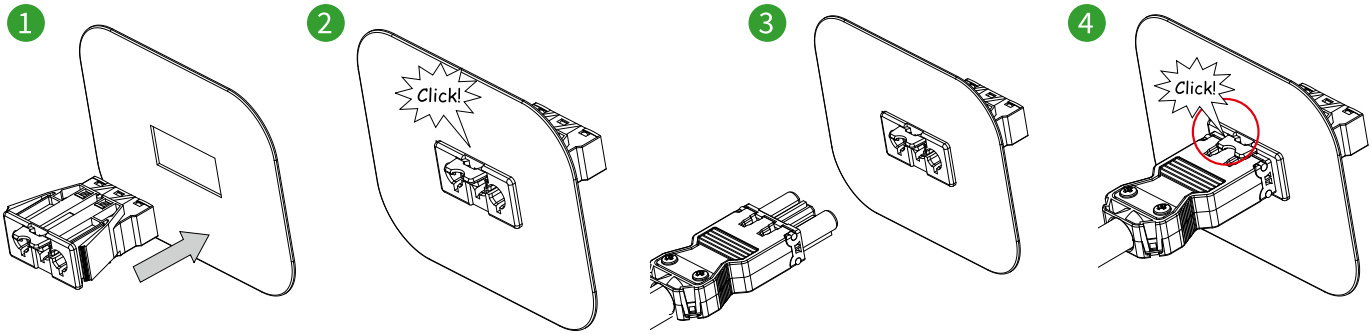

NOTE:

For a plug connector that is not enclosed, protection against electric shocks is provided by the housing of the equipment in which the connector is installed, in accordance with the applicable product safety standard.

Metal sheet cut-outs

3-pole GST18®

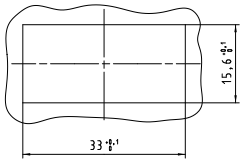

4-pole GST18®

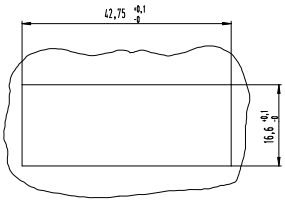

5-pole GST18®

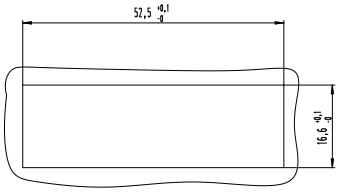

6-pole GST18®

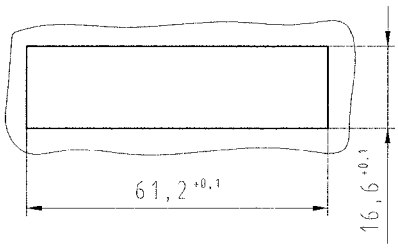

GST18i3…i6 INSTALLATION INSTRUCTIONS

Use of distributors

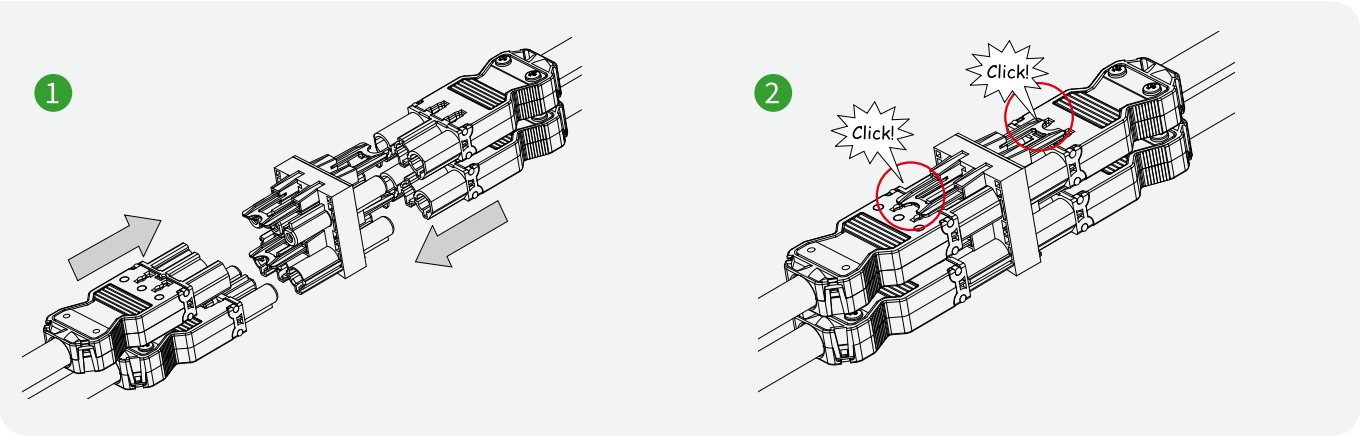

USE OF THE HIGH STRAIN RELIEF 4 MM² ON DISTRIBUTORS:

With H distributors from the old 92.0x0.0/1/4x53.x series, the female connector above the input / male connector is not capable of accommodating the high strain relief if this is already used with the input.
With H distributors from the new 92.0x0.6/753.x series, the high strain relief can be used on all slots.
With HH distributors, the female connector above the input / male connector is not capable of accommodating the high strain relief if this is already used with the input.

PLEASE NOTE:

In h and T distributors, one output each does **not** have an interlocking device.
This output is intended for plugging directly into device connectors. If you use this output for a cable assembly, for example, a separate interlocking device (accessory) must be used.

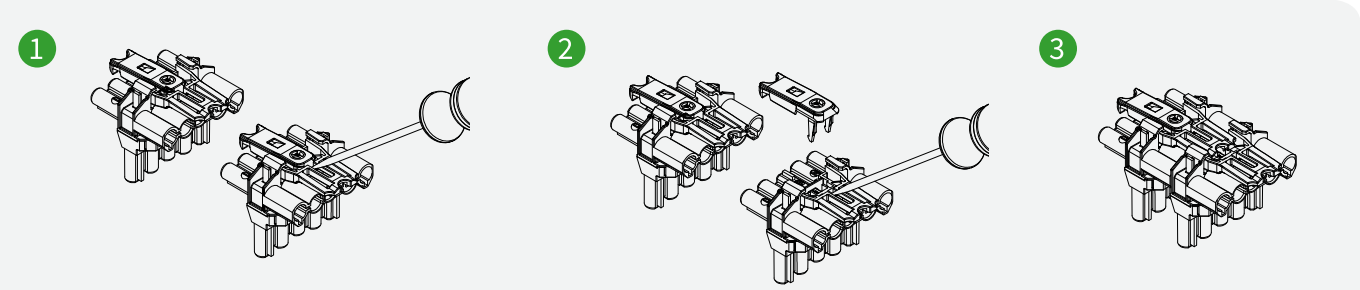

Cascading, prior removal of the slidelock, with screwdriver

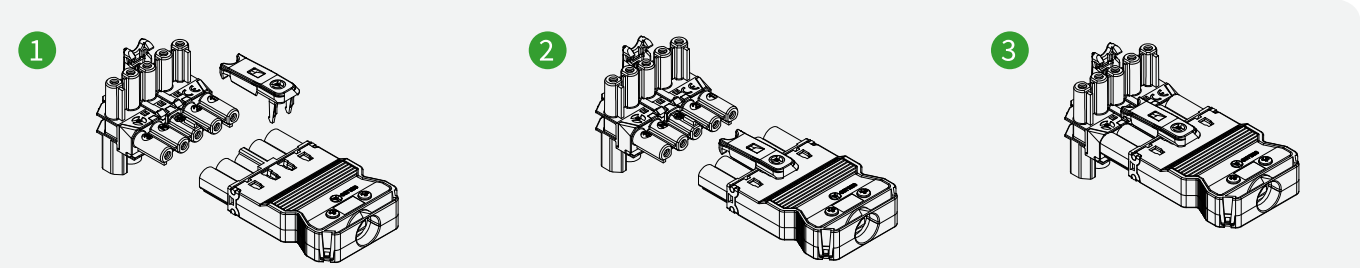

Use with field connection piece at the lower output, additional slidelock

GST18i3…i6 INSTALLATION INSTRUCTIONS

Distribution unit mounting plate 07.413.6853.1/0 for GST18®

SCREW-ON MOUNTING PLATE

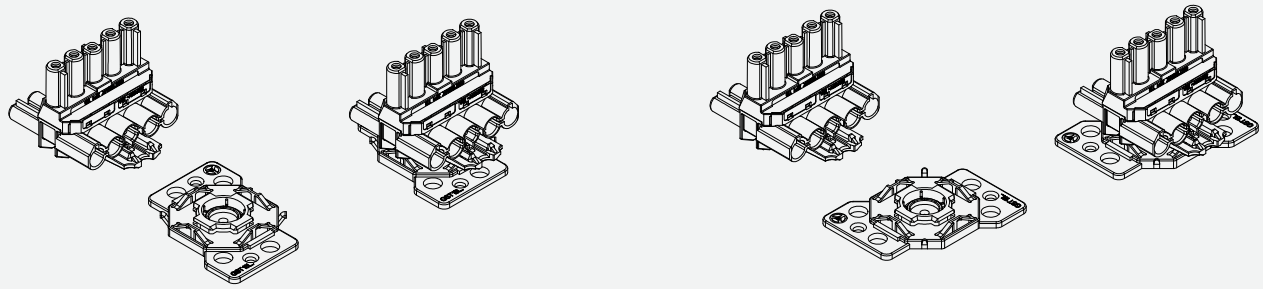

Assembly on mounting plate, direction 1

Assembly on mounting plate, direction 2

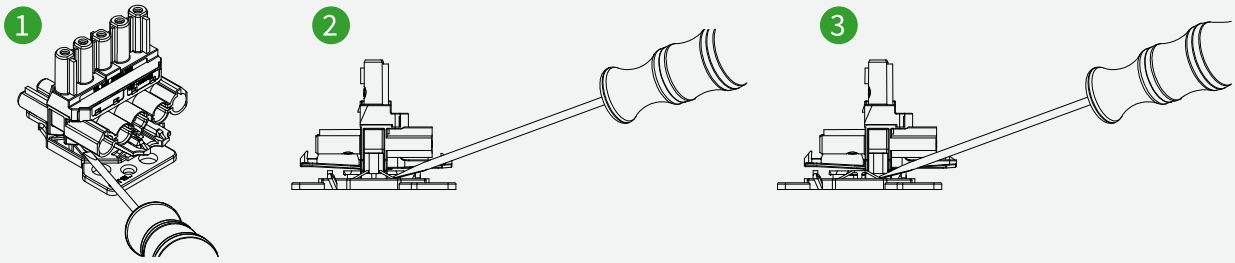

Removal from mounting plate, with screwdriver

PLEASE NOTE:

Thanks to the molded assembly dowels, the mounting plate can be assembled on common cable support systems without using tools.

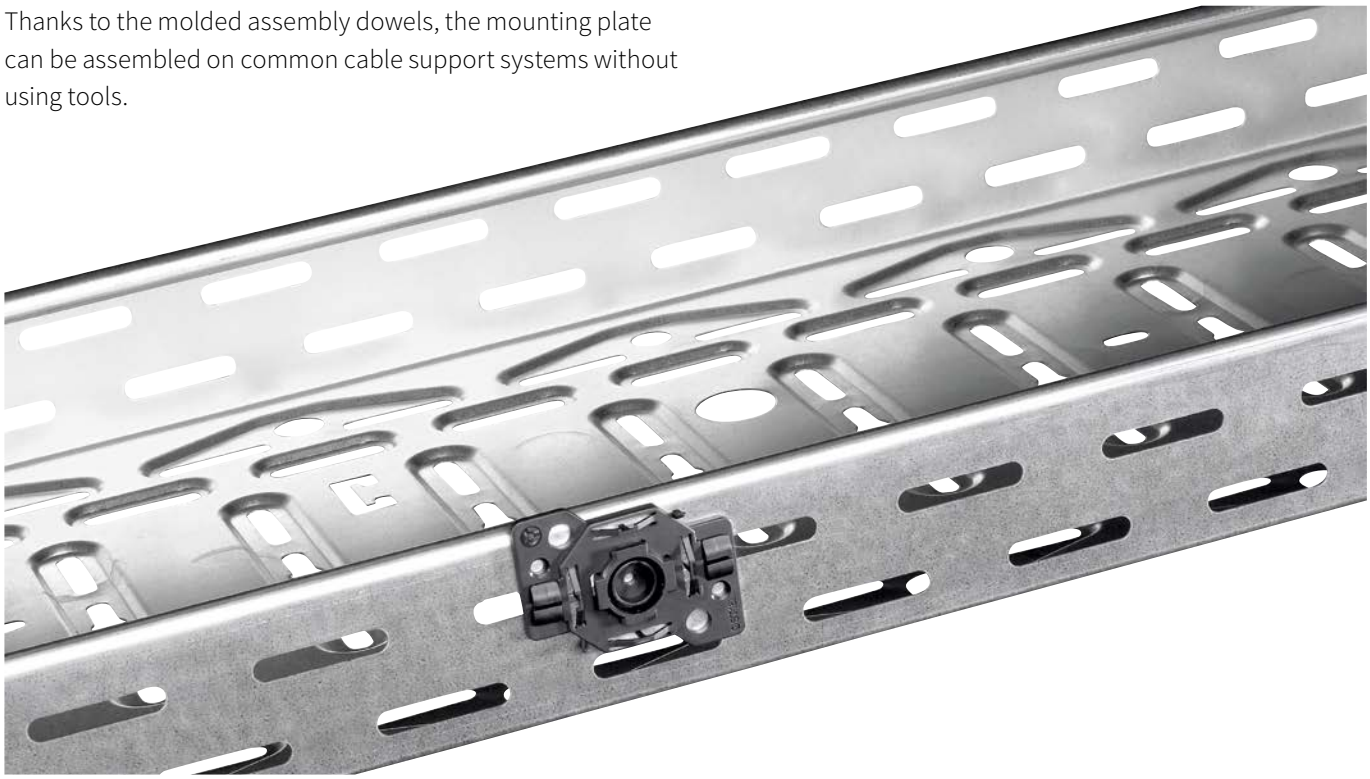

GST18i3…i6 INSTALLATION INSTRUCTIONS

GST18i5 distribution unit mounting plate

SCREW-ON MOUNTING PLATE (OLD DESIGN)

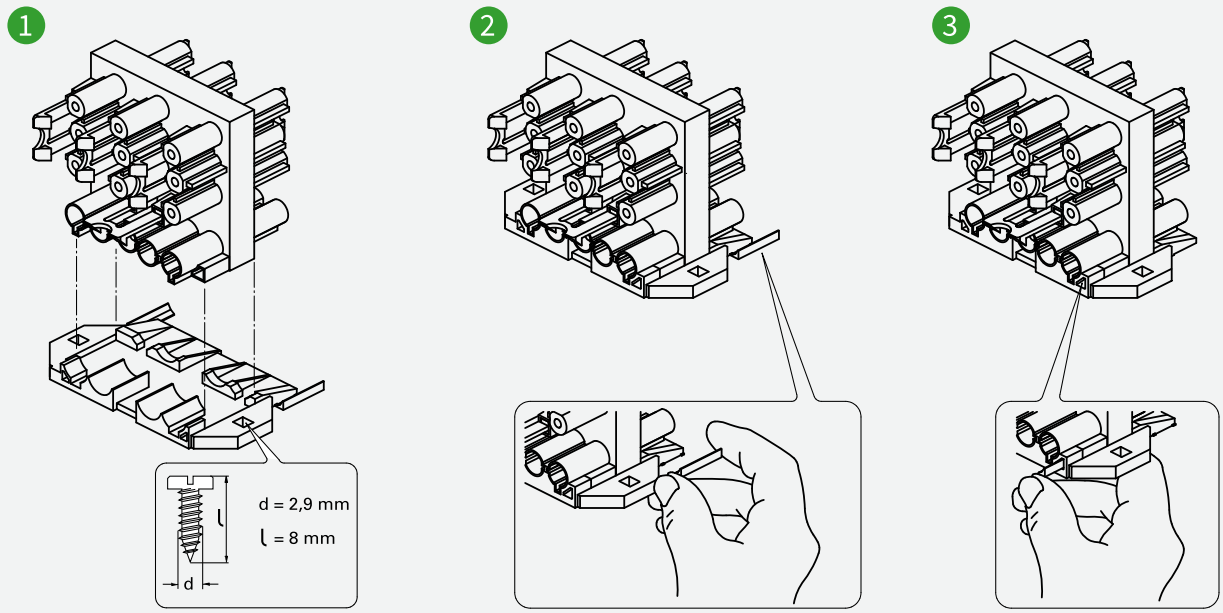

Place the distributor on the mounting plate

Break the locking pin off

Push the locking pin in

SNAP-ON MOUNTING PLATE (OLD DESIGN)

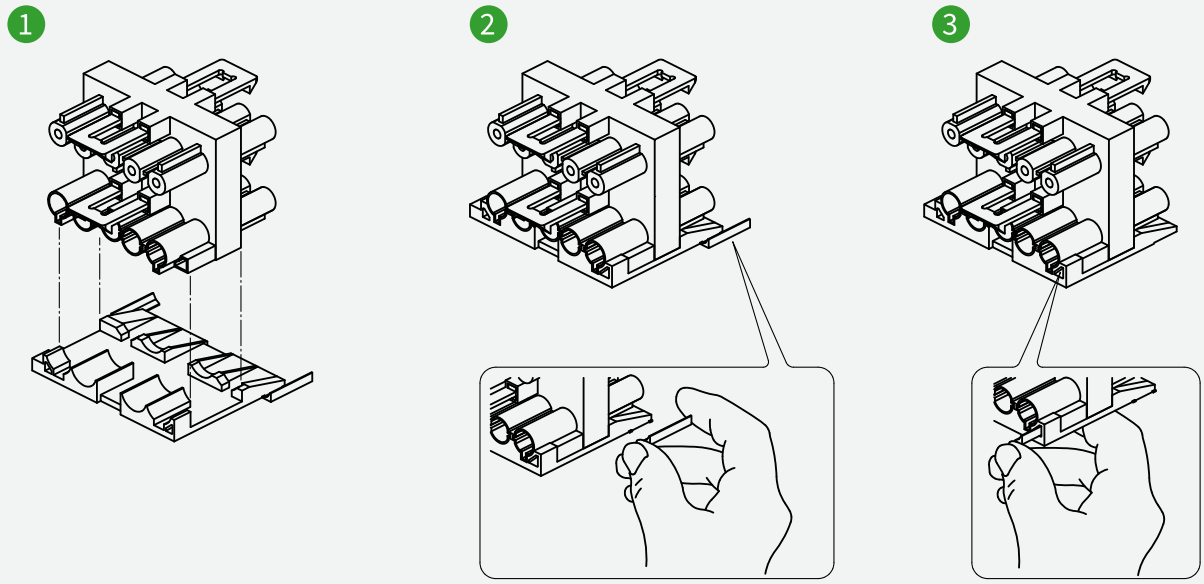

Place the distributor on the mounting plate

Break the locking pin off

Push the locking pin in

GST18i3…i6 INSTALLATION INSTRUCTIONS

Connection diagrams | Switching distributor

ON-OFF CIRCUIT

92.030.0053.1

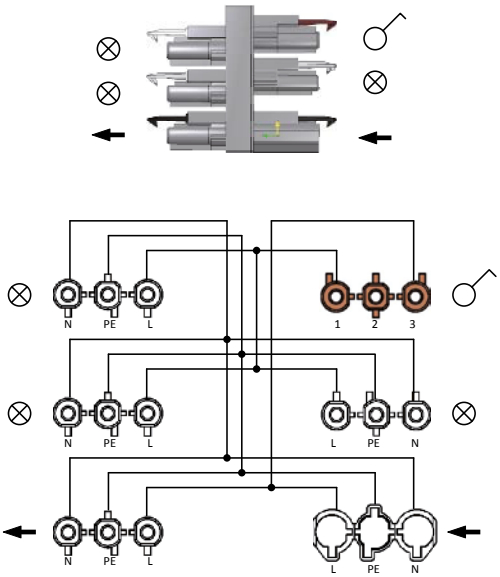

MOTION DETECTOR

92.030.0153.1

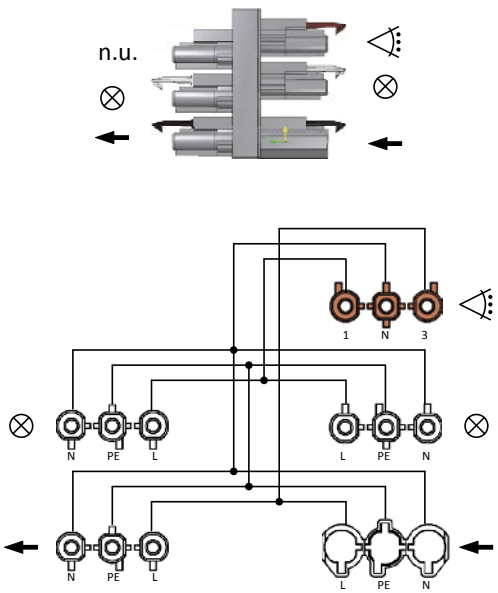

SERIES CIRCUIT

92.030.0353.1

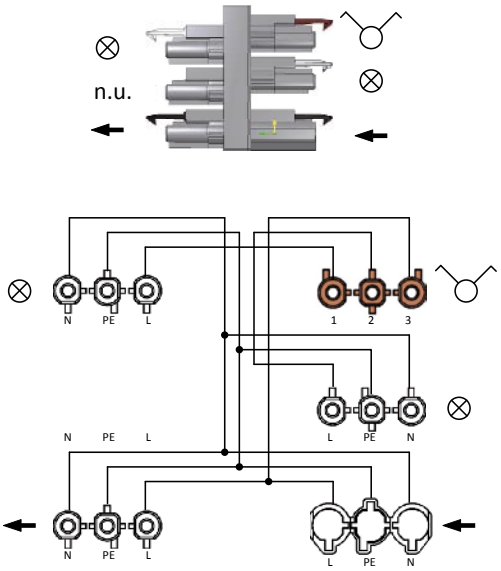

TWO-WAY CIRCUIT

92.030.0253.1

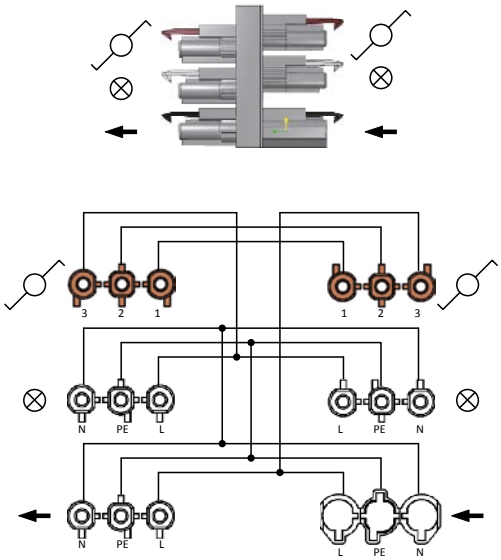

NOTE:

Switching distributors are only suitable for use in effectively monitored areas.

GST18i3 INSTALLATION INSTRUCTIONS

Technical data for gesis® TOP

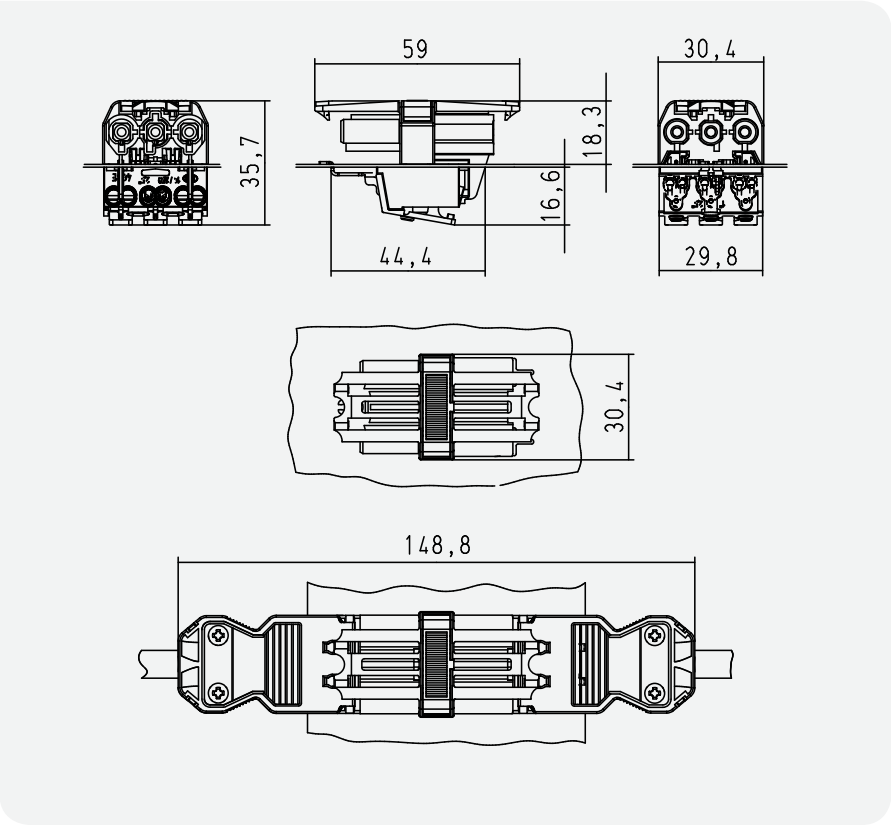

GESIS® TOP:

- Rated voltage max. 250 V
- Rated current max. 20 A
- Rated current max. 2.5 A, in luminaire outlet
- Temperature range of -35 °C to +50 °C
- Protection rating IP40, inserted
- Approval for feed-through IEC 61535, output IEC 61984
- Color white
- Dimensions (L x W x H) 59.0 x 30.4 x 18.3 mm

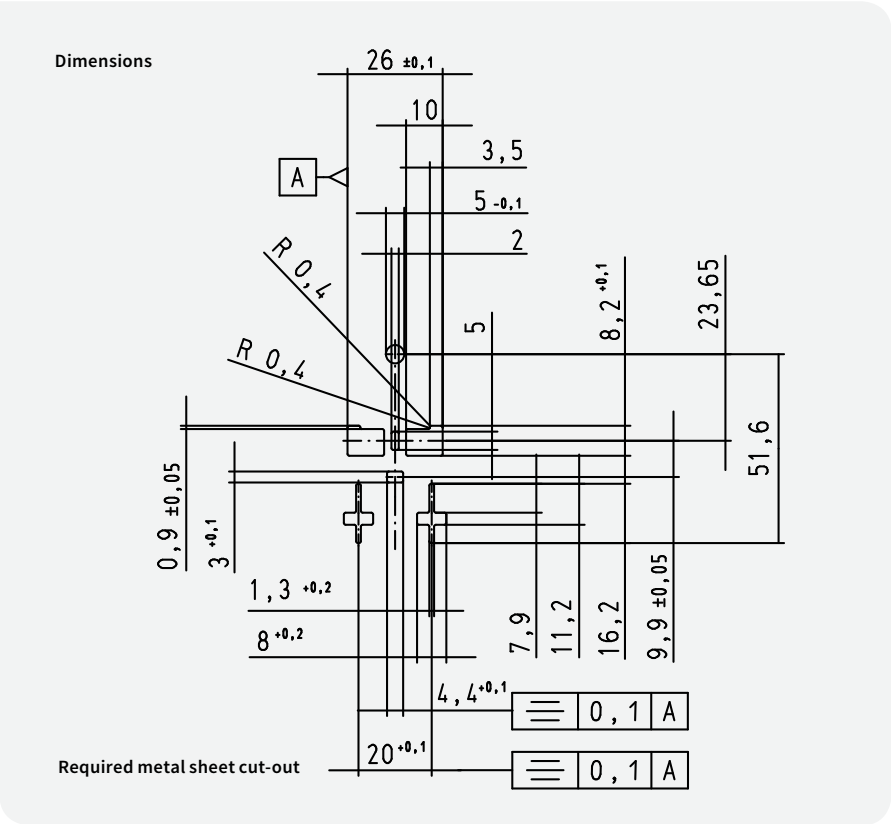

LUMINAIRE TERMINAL:

- as specified by the manufacturer BJB
- Ref. No. BJB 46.413.1302

GST18® INSTALLATION INSTRUCTIONS

Installation instructions for IDC adapter

1

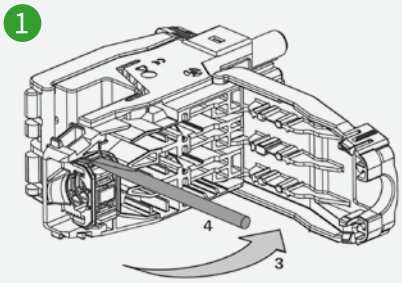

2

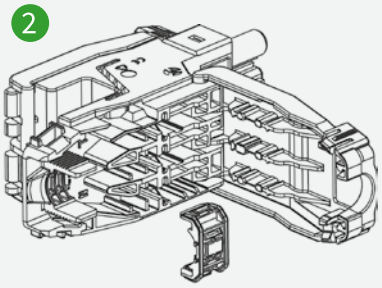

3

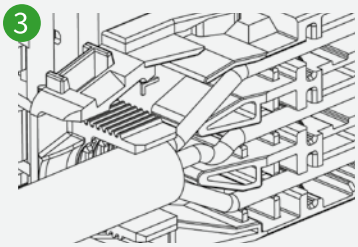

1. Cut cable at the desired point
2. Strip both ends of the cable by 35 mm
3. Open the cover
4. Undo the strain relief using a screwdriver

5. Insert conductors into guide slots (mind the correct pole assignment!)

Detail

4

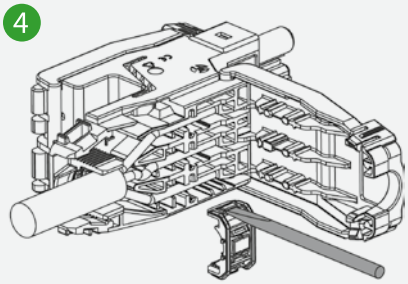

6. Insert the strain relief Press firmly into place with a screwdriver

5

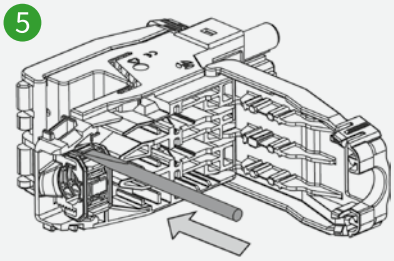

7. Close the cover
8. Repeat the above steps on the back of the adapter
9. Connect the GST 18i3 cable, use the interlocking device

Separating locked connectors

1

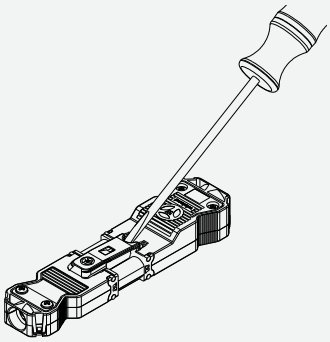

2

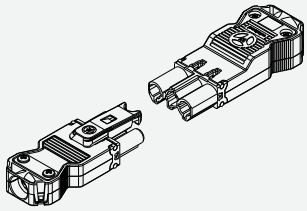

PLEASE NOTE:

To release locked flying leads, distributors, snap-ins, device connectors, and soldered parts, raise the interlock using a suitable flat screwdriver and disconnect the connector.

GST15i2…i5 INSTALLATION INSTRUCTIONS

Plug connector with screw connection

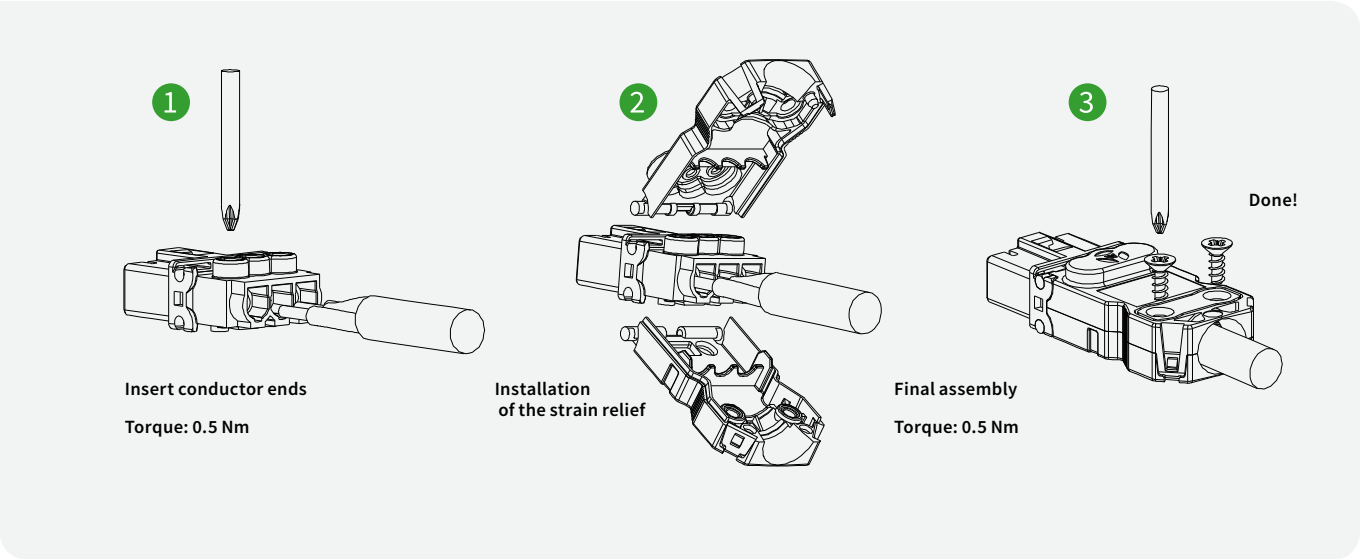

Preparing the conductors

Solid and fine-stranded wires 0.5 ... 1.5 mm² can be connected with or without a ferrule.
A ferrule should not be used with 2.5 mm².

STRAIGHT DESIGN

GST15i2

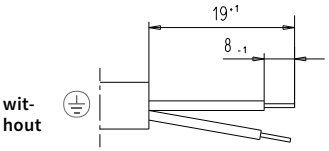

GST15i4

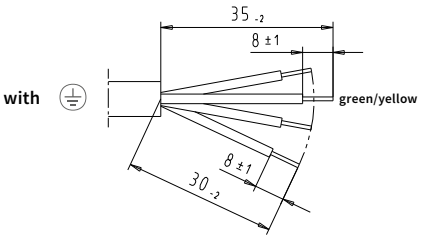

GST15i3

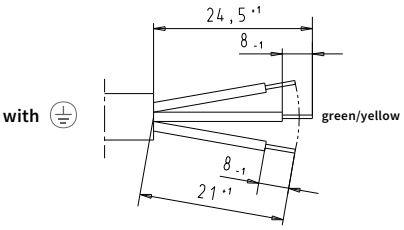

GST15i5
(and GST15i4 in 5-pole housing)

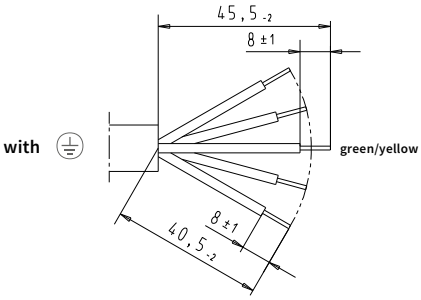

ANGLED DESIGN

GST15i5
(and GST15i4 in 5-pole housing)

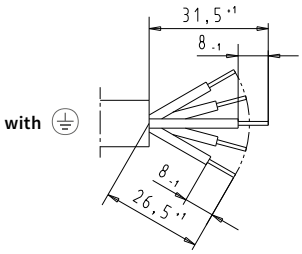

GST15i2…i5 INSTALLATION INSTRUCTIONS

Snap-in

Assembly direction for GST15i2, GST15i4, and GST15i5

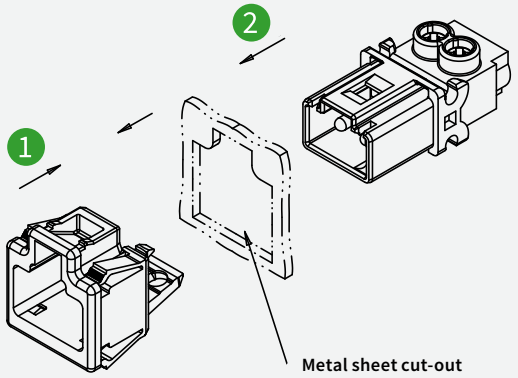

Assembly direction for all GST15

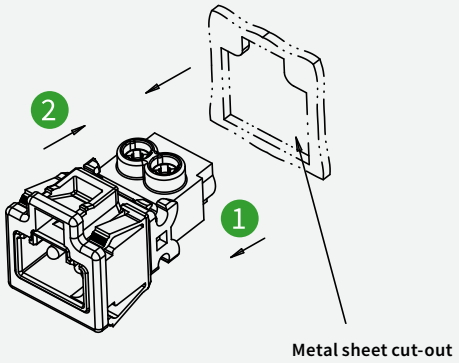

For a plug connector that is not enclosed, protection against electric shocks is provided by the housing of the equipment in which the connector is installed, in accordance with the applicable product safety standard.

Metal sheet cut-outs

GST15i2

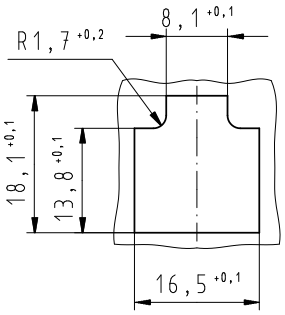

GST15i3 flush

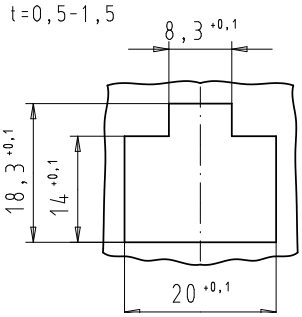

GST15i3 protruding

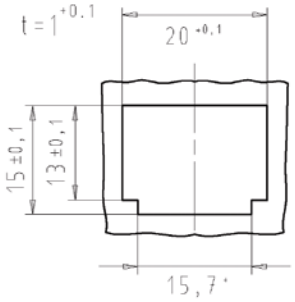

GST15i4

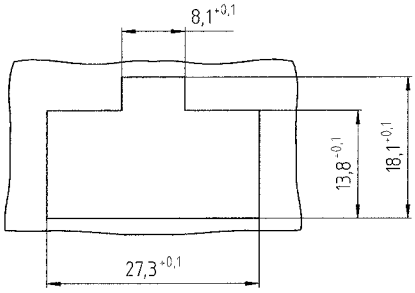

GST15i5

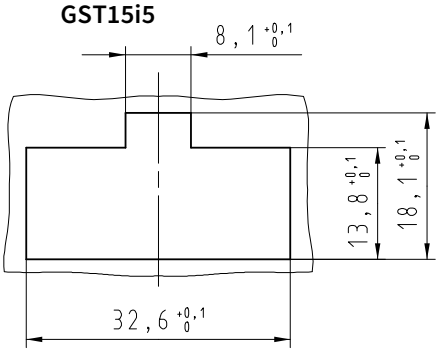

also valid for GST15i4 as a design in 5-pole housing

GST15i2…i5 INSTALLATION INSTRUCTIONS

Drilling patterns | Soldered parts

2-pole	3-pole	4-pole	4/5-pole

Female vertical

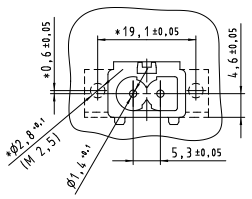

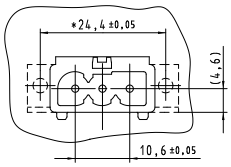

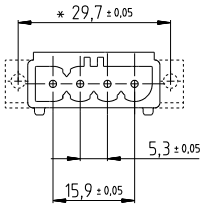

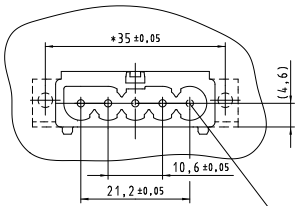

for 5-pole only

Male vertical

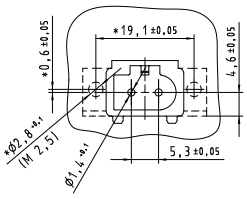

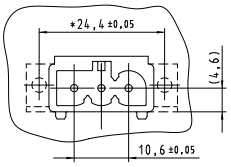

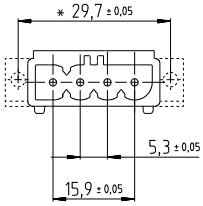

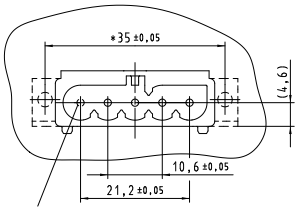

for 5-pole only

Female horizontal

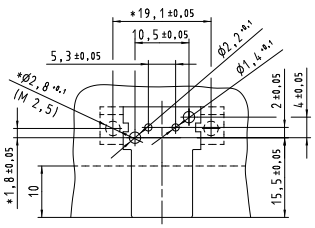

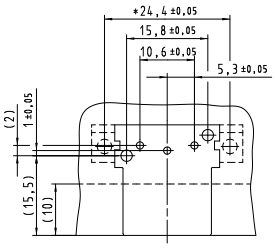

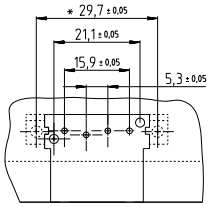

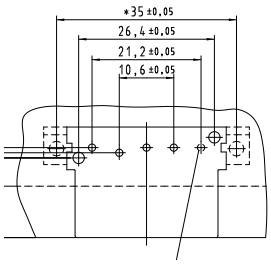

for 5-pole only

Male horizontal

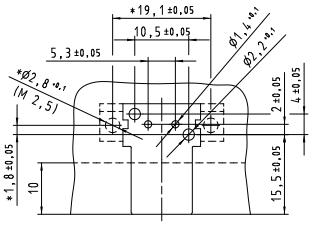

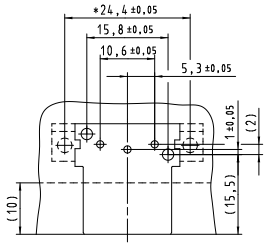

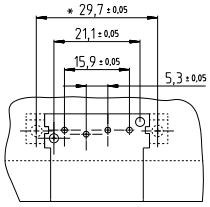

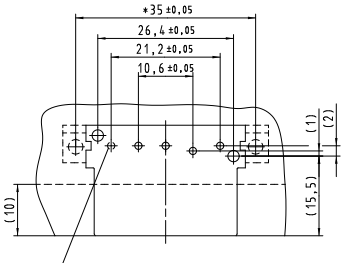

for 5-pole only

GST15i2…i5 INSTALLATION INSTRUCTIONS

Distributor h with phase selection on GST18i3

91.050.3151.0 **Tap L1** on GST18i3 Code 1 (black / white)

91.050.3251.0 **Tap L2** on GST18i3 Code 1 (black / white)

91.050.3351.0 **Tap L3** on GST18i3 Code 1 (black / white)

Distributor does not have mounting option

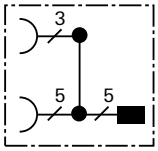

Use of mounting plates for distributors

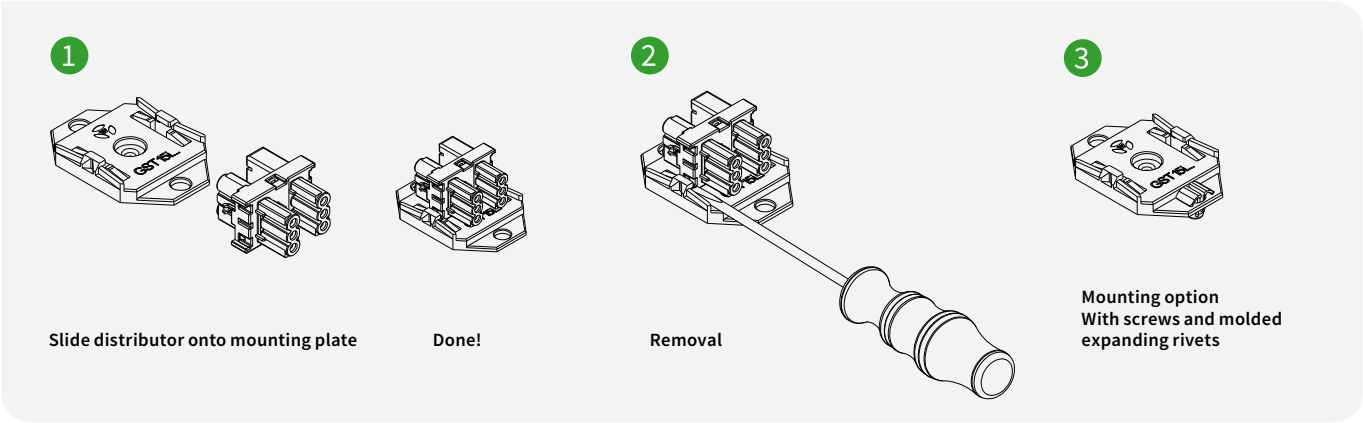

Shows the mounting plate for H/h distributors. Identical process for the mounting plate for HH distributors

Separating locked connectors

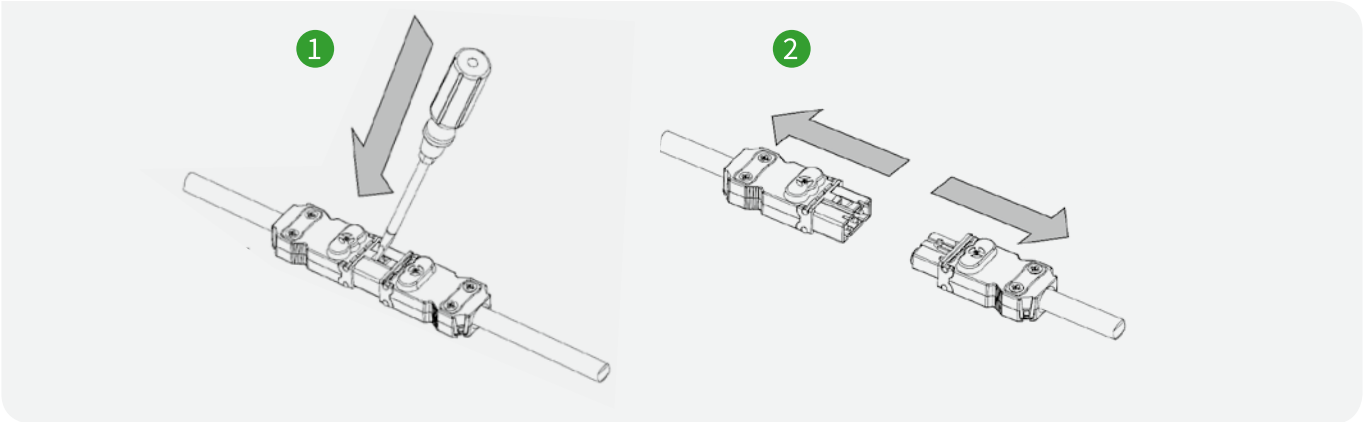

- Using a suitable tool, press the interlock down and separate the connector at the same time.
- Identical process for protruding snap-ins, soldered parts, and distributors.
- To remove the flush snap-in, the unlocking tool must be inserted into the designated opening channel.
- To remove a plug connector or device connector from the output of the T distributor, the appropriate tool must be attached to the lever.

GST08i2...i3 INSTALLATION INSTRUCTIONS

gesis® MICRO

GST08i2 drill hole dimensions

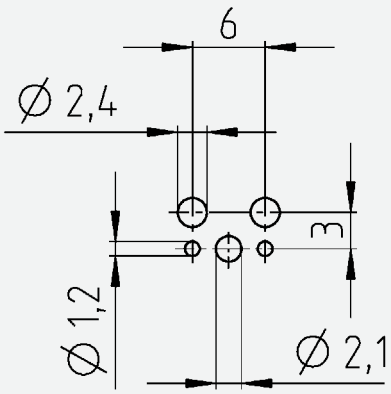

Housing feed-throughs (only for female connectors)

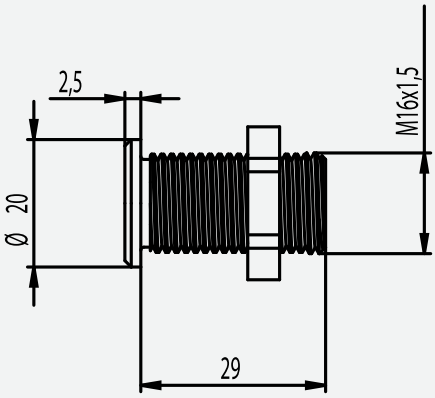

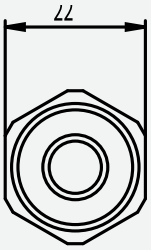

GST08 general assembly and removal

The plug connectors do not have a tool-safe interlocking device. Connection and disconnection are done by plugging and pulling. Depending on the coding used, the direction must be taken into account when plugging in as plug connectors with the coding colors of blue, green, and yellow have reverse polarity protection.

To increase the protection rating of a flying lead to IP44, a sealing grommet (see Accessories) can be inserted for GST08i2.

NOTE:

A field connection is not possible.

System structure with yellow coding, application seriel:
All slots in the system must always be occupied.
An unused slot (e.g. one of the distributor outputs) will result in a non-functional system.

BST14i2/i3 INSTALLATION INSTRUCTIONS

gesis® NV

BST14 drill hole dimensions

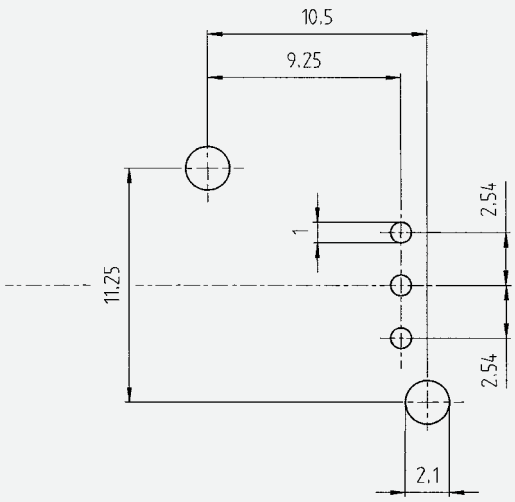

Snap-in metal sheet cut-outs

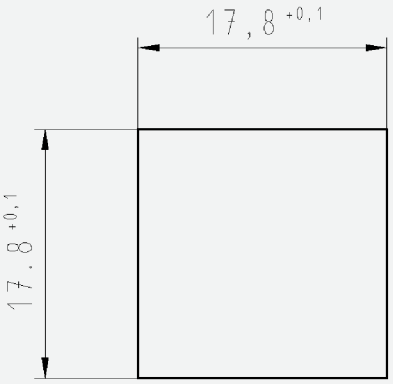

Material thickness 0.5 – 1.5 mm

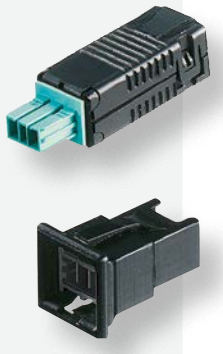

BST14 general assembly and removal

The plug connectors have a mandatory interlocking device, which is part of every component. This is not a tool-proof interlocking device. Connection and disconnection are done by plugging and pulling. The direction must be taken into account when plugging in as the plug connectors are coded.
When pulling, the interlock must be over-pulled.

ASSEMBLY

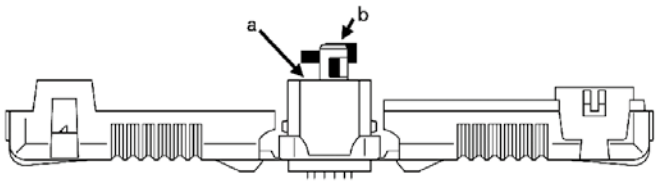

Bare the cable (21+-1 mm) and strip the single wires (9-1 mm). Conductors can be pushed into the connecting spring (see a in the diagram). Alternatively, the opening slide can also be pressed and held to open the connecting spring in order to insert the conductor (see b in the diagram). Allow the strain relief to snap shut. This must completely enclose the cable sheathing. A clear click must be audible.
Check that both lugs on the strain relief are firmly closed.

REMOVAL

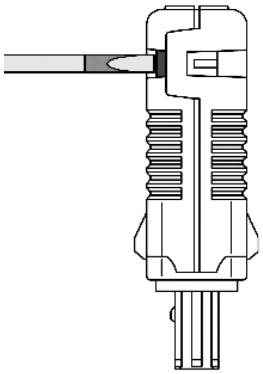

Open both lugs on the strain relief using a suitable tool (see diagram).
Remove the conductors by holding down the opener-slider and pulling out the individual conductors.

GESIS® NRG INSTALLATION INSTRUCTIONS

Flat cable system 5/5+2-pole

INSTALLING OUTLETS
using the example of the GST18i3 tap

1. Install the flat cable in a suitable cable-routing system. Note the cable installation direction for the outgoing direction of the connectors. Insert the flat cable into the coded baseplate so that it lies flush.

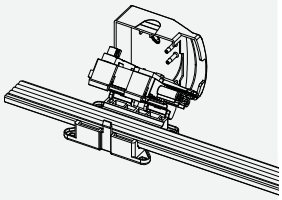

2. If necessary, fasten the baseplate to the desired subsurface using the mounting holes.

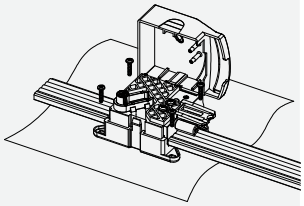

3. Close the connecting module and engage it with a clearly audible click.
4. GST18i3 only: Bring phase selection slider to the desired position until it engages with a clearly audible click.

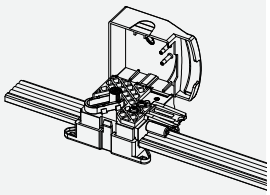

5. Tighten contact screws (0.5 Nm).
6. **Phase change:** (GST18i3 only) Loosen the screw on the phase selection slider until the red ring is flush with the white contact slider. Select the phase again and tighten the screw (0.5 Nm).
   Caution:
   If the contact screw has already been screwed into a position, this position cannot be used.

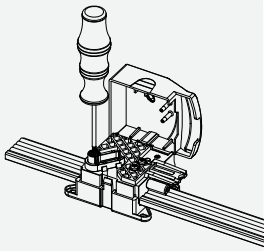

7. Close the cover and engage it with a clearly audible click.
   Caution:
   The screws are not all correctly tightened if the cover does not completely close!

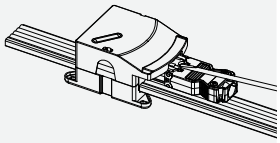

8. Attach connector and latch it with a clearly audible click.

INSTALLING FEED
using the example of a 5-pole feed

1. Insert the sheath-stripped (PE: 100 mm, L1/D1: 82 mm, N: 72 mm, L2/D2: 62 mm, L3: 56 mm, stripping tool in the lid) and insulation-stripped (8 mm) conductors into the marked termination points one after the other and tighten the contact screw (0.5 Nm).

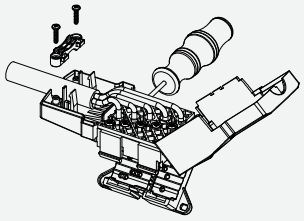

2. Insert the feed cable into the strain relief and use both screws to tighten the strain relief bracket (0.6 Nm).
3. Insert the flat cable into the coded baseplate (92.050.1553.1 for green/black cable, 92.050.1653.0 for blue cable, 93.420.5453.0 for green cable, 91.020.5453.0 for black cable) so that it lies flush. Note the laying direction for the outgoing direction of the connectors.

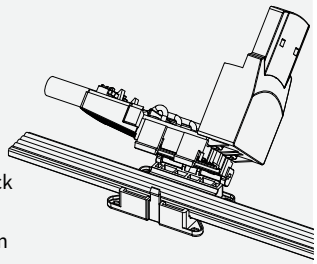

4. If necessary, fasten the baseplate to the desired subsurface using the mounting holes.

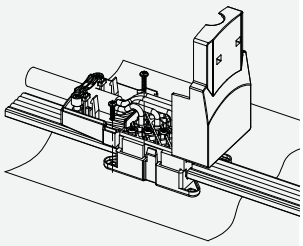

5. Tighten contact screws (0.5 Nm).
6. Close the cover and engage it with a clearly audible click.
   Caution:
   The screws are not all correctly tightened if the cover does not completely close!

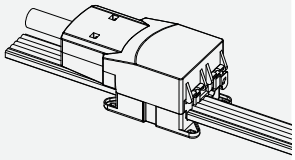

NOTE:

- Sheath strip length 2-pole feed: 25 mm
- Insulation strip length 2-pole feed: 8 mm
- For fine-stranded conductors use ferrules

Flat cable system 5/5+2-pole

REMOVING OUTLETS
using the example of the GST18i3 tap

1. Use a tool (screwdriver) to release the connector interlock and remove the connector. No tools are required to release the BST14 connector.
2. Push interlock in the direction of the arrow and open the cover.
3. Loosen the contact screws.
4. Unlock the baseplate interlock with a tool (screwdriver) and remove the module from the flat cable.
5. Close the contact openings in the cable with a cable repair patch.

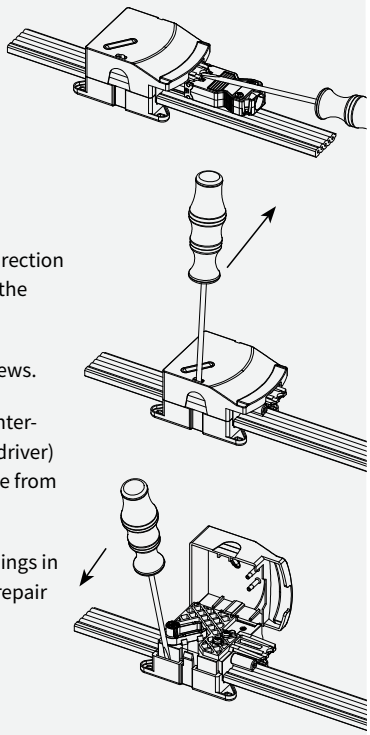

REMOVING FEED
using the example of a 5-pole feed

1. Use a tool (screwdriver) to open the cover interlock. Press the interlock lugs in the direction of the arrow.
2. Loosen the contact screws and connection screws.
3. Unlock the baseplate interlock with a tool (screwdriver) and remove the module from the flat cable.
4. Close the contact openings in the cable with a cable repair patch.

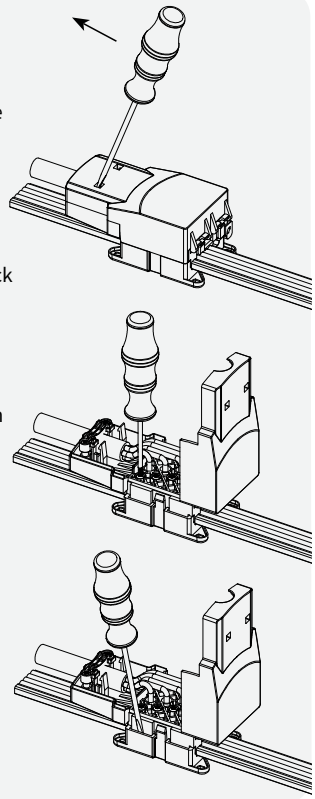

ADDITIONAL INFORMATION:

- To remove the cover, insert a screwdriver into the slot provided and raise gently.
- **For VDE-approved installation, the ends of the flat cable must be cut off with the special cable scissors and terminated with the cable end cap.**
  This guarantees the necessary insulation between the conductors.
- If the special cable scissors are not used and the end of the cable is cut straight, an end cap with a silicone gel from the accessories must be used. The VDE approval does not cover this, only a manufacturer's declaration.
- After removing the adapters, the sections of cable that have been terminated with the piercing screws must be sealed with the cable repair patch from the accessories.
- Functional capability can only be guaranteed if original Wieland components and flat cable are used.

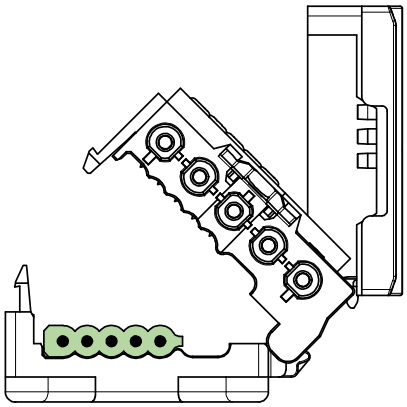

Flat cable system, 5-pole, open-ended

GESIS® NRG INSTALLATION INSTRUCTIONS

Flat cable system 5/5+2-pole: drill holes

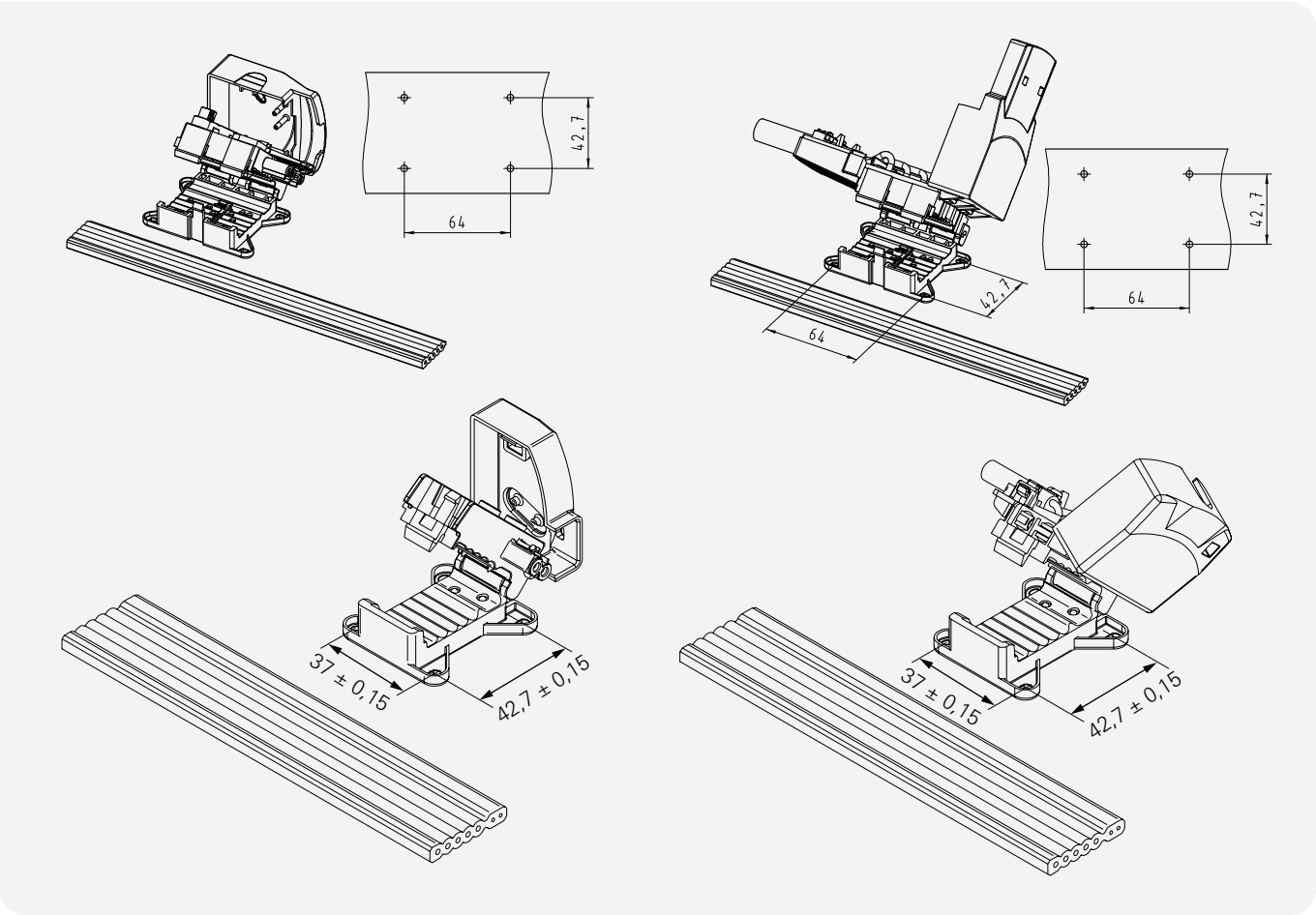

Cable clamps

For fastening materials we recommend common materials such as cable clamps from OBO Bettermann:

Color: light gray	Type	Order no. from OBO
single-sided	2032	2205017
single-sided, press-on	2032 AS	2205052
double-sided	2034	2205041
double-sided, press-on	2034 AS	2205054

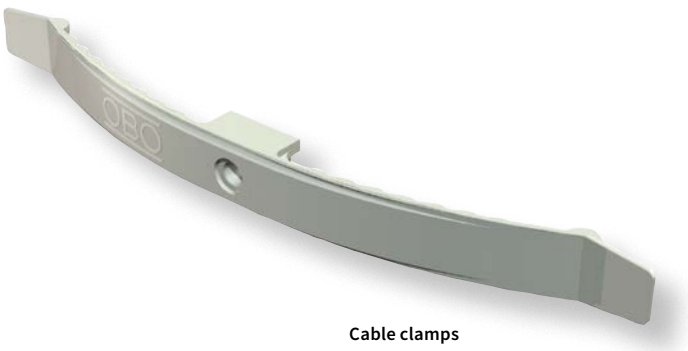

Cable clamps

GESIS® NRG INSTALLATION INSTRUCTIONS

Flat cable system 5-pole, 5G10 mm²

Connection cross section: 2.5 – 6 mm², fine-stranded with ferrule, ferrule length 12 mm.
6 mm² with ferrule without insulating collar.
Sheath strip length 65 mm, insulation strip length 12 mm

ASSEMBLY

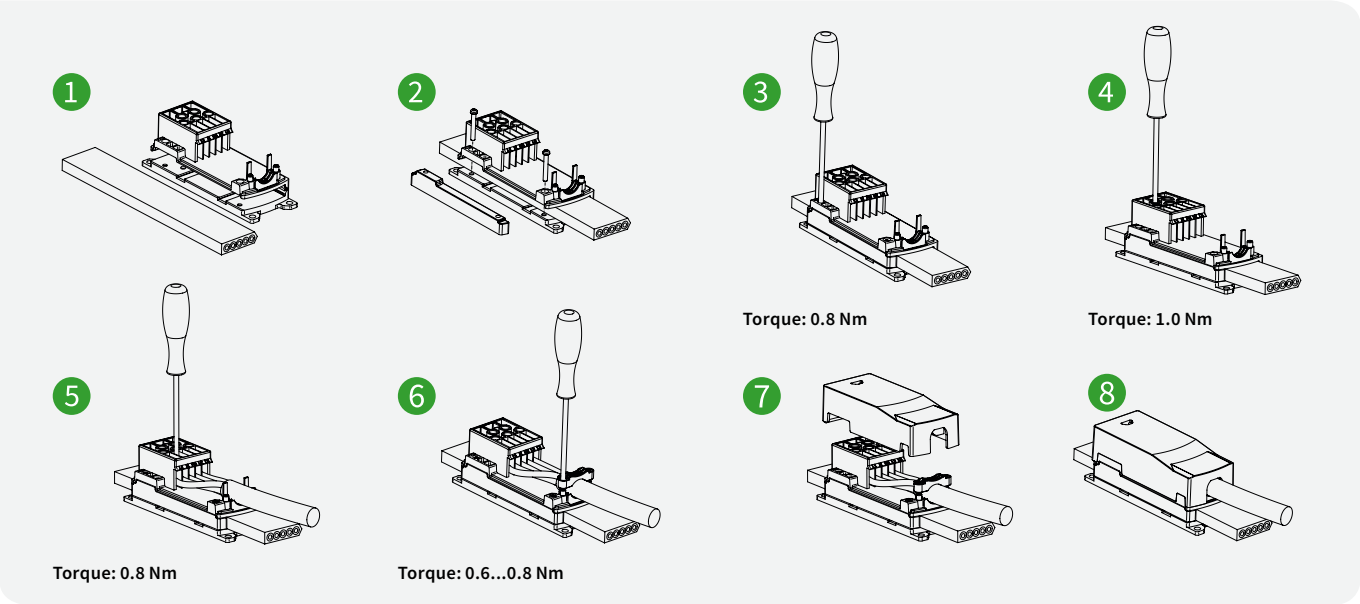

REMOVAL

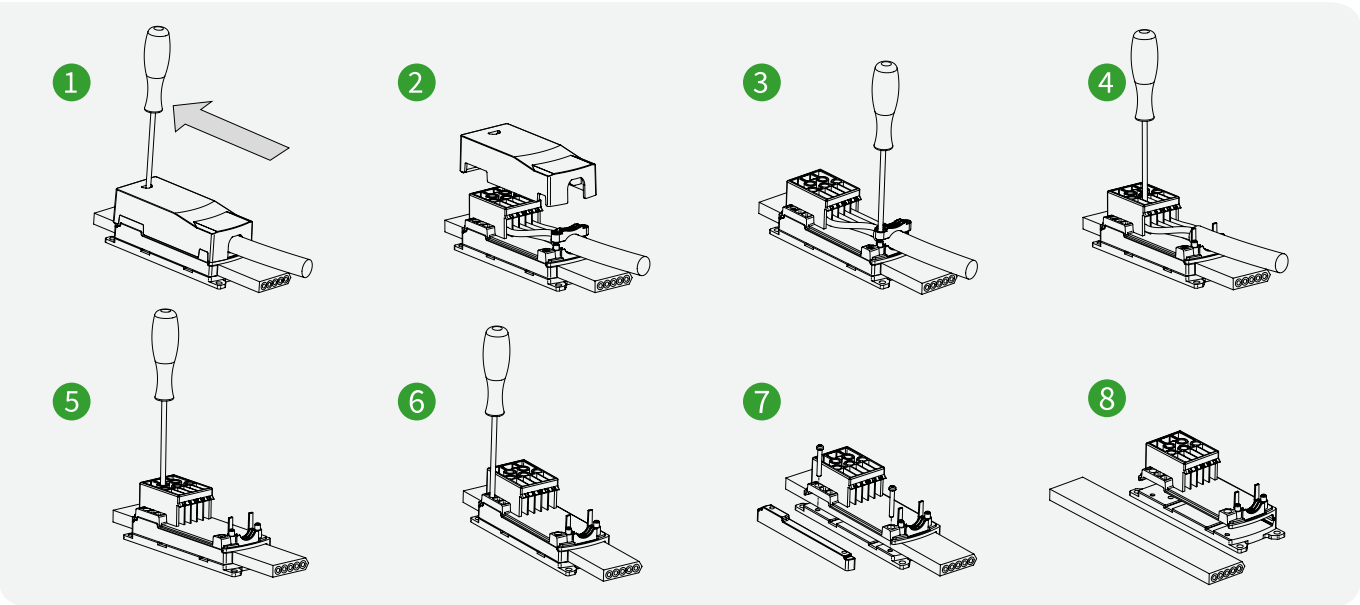

NOTE:

- After removing the adapters, the sections of cable that have been terminated with the piercing screws must be sealed with the cable repair patch from the accessories.
- Functional capability can only be guaranteed if original Wieland components and flat cable are used.

OVERVIEW OF GESIS® NRG

	5G2.5/4 BASIC	5G2.5/4 DIMM	5G2.5/4+2X1.5 not shielded	5G2.5/4+2X1.5 shielded	5G10
	x=1 x=7				
Flat cables					
PVC 2.5² Eca	00.712.0303.x	00.712.0303.6	00.712.1323.1	00.712.0323.7	–
Halogen-free 2.5² Eca	00.710.0303.x	00.710.0303.6	00.710.1323.1	00.710.0323.7	–
Halogen-free 2.5² B2ca	00.770.0303.x	00.770.0303.6	00.770.1323.1	00.770.0323.7	–
Halogen-free 4² Eca	00.710.0304.x	00.710.0304.6	00.710.1324.1	00.710.0324.7	–
Halogen-free 4² B2ca	00.770.0304.x	–	00.770.1324.1	00.770.0324.7	–
PVC 10² Eca	–	–	–	–	00.702.0306.7
Halogen-free 10² Eca	–	–	–	–	00.709.0306.7
Halogen-free 10² B2ca	–	–	–	–	00.770.0306.7
Mains 5-pole feed	92.050.1553.1	-	92.050.1553.1	92.050.1553.1	92.050.9053.0/92.050.8853.0
Mains 5-pole outlet L1, L2, L3, N, PE 3~	92.051.5453.1	-	92.051.5453.1	92.051.5453.1	92.050.9153.0
Mains 3-pole outlet L, N, PE 1~	92.031.5453.1	-	92.031.5453.1	92.031.5453.1	-
Mains 3-pole + signal feed	-	92.050.1653.0	-	-	-
Mains 3-pole + 250 V signal, e.g. DALI outlet L, N, PE, D1, D2 1~ SELV	-	92.051.5553.0	92.051.5653.0	-	-
Mains 3-pole + 250 V signal, e.g. TouchDIM outlet L, N, PE, D1, D2 1~	-	92.051.5553.0	-	-	-
Mains 3-pole + 250 V signal, e.g. SMI outlet L, N, PE, D1, D2 1~	-	92.051.5553.0	-	-	-
Only 250 V / 6 A signal, e.g. DALI feed	-	-	91.020.5453.0	-	-
Only 250 V / 6 A signal, e.g. DALI outlet D1, D2 SELV	-	-	91.021.5453.0	-	-
Only SELV 3 A, e.g. KNX feed	-	-	-	93.420.5453.0	-
Only SELV 3 A, e.g. KNX outlet 1+, 2- SELV KNX	-	-	-	93.421.5453.0	-
End cap 1)	06.562.0653.0	06.562.0653.0	06.562.9753.0	06.562.4353.0	05.563.9553.0
Suitable connector (only a selection)	GST18i3 black 92.932.3053.1 GST18i5 black 92.954.4053.1	GST18i5 pastel blue 92.954.4453.0	GST18i3 black 92.932.3053.1 GST18i5 black 92.954.4053.1 GST15i2 pastel blue 91.922.2453.0	GST18i3 black 92.932.3053.1 GST18i5 black 92.954.4053.1 BST14i2 green 93.422.0553.1	-

1) = 2 end caps per cable piece. Special cable scissors must be used.

MST® INSTALLATION INSTRUCTIONS

gesis® METALYNX²

NOTES:

- The MST® system can be ordered with cable assemblies with metal hose, 16 mm diameter, or with flexible sheathed cables.
- This has no impact on the coding.

If a metal hose defined by us is used, the system has UL approval. These components are not part of this catalog. Please contact us.

MST® general assembly and removal

The plug connectors have a tool-safe interlocking device. This is part of every component. Connection is by plugging. Disconnection is by unlocking with the tool insert and pulling. The direction must be taken into account when plugging in as the plug connectors are coded.

NOTE:

A field connection is not possible.

TECHNICAL DATA

	GST18®	GST15	GST08
General			
Number of poles	3…6	2…5	2, 3
System components	Plug connector, solder connector, snap-in, built-in part, distributor, cable assembly, accessories	Plug connector, solder connector, snap-in, distributor, cable assembly, accessories	Solder connector, distributor, cable assembly, accessories
Available codings	Depends on the number of poles: Mains 250 V / mains 250/400 V Mains 250 V + non-SELV UPS 250 V / UPS 250/400 V Switch funktion not SELV SELV Customized with PE Customized without PE Mains 250 V + emergency + non-SELV	Depends on the number of poles: Mains 250 V for protection class II Mains 250 V / mains 250/400 V Mains 250 V + non-SELV Switch funktion not SELV SELV Customized with PE Customized without PE	Depends on the number of poles: 250 V AC 24 V (rated volt. 50 V) 12 V (rated volt. 50 V) 50 V constant current
Type of coding	mechanical, optical (color)	mechanical, optical (color)	mechanical, optical (color)
Reverse polarity protected	Yes	Yes	Yes (except for GST08i2/i3 white)
Locking mechanism	Self-locking, able to be released with a tool, partly integrated, partly separate	Self-locking, able to be released with a tool, integrated	No
IP protection	IP20 (inserted or with end cap IP40)	IP20 (inserted IP40)	IP20 (inserted IP40, with sealing grommet IP44)
Ambient temperature during operation in °C	-5 … +40	-5 … +40	-5 … +40
Fire load in kWh	Please refer to our eShop	Please refer to our eShop	Please refer to our eShop
Pitch in mm	9,75	5,3	6
Solder pin length in mm	Horizontal 3.3; vertical 3.2	3,2	2,4
Color of strain relief in standard	black (white with white coding)	white (black with black coding)	same as cable color
Rated values			
Rated voltage in A	20 (depending on the cable used)	16 (depending on the cable used)	6
Alt. rated voltage in A	GST18i4 turquoise: depending on the pole assignment and application. Please contact us.	GST15i2 pastel blue: 6 GST15i4/i5 may green: 13 GST15i4/i5 turquoise: 13 GST15i5 light blue: 13 (depending on the cable used)	GST08i2 white: 2.5
Rated voltage in V	2, 3-pole: 250 4, 5, 6-pole: 250/400	2, 3-pole: 250 4, 5-pole: 250/400	SELV
Alt. rated voltage in V	light blue: 50	light blue: 50	white: 250
Rated impulse voltage	4 kV overvoltage category III	4 kV overvoltage category III	2.5 kV
Pollution degree	2	2	2
Norms and approvals			
Applied product standards	61535, (61984 with GST18i4 turquoise) UL 1977, CSA …, 60320 with GST18i3 1.5 mm² with PVC cable	61535 (61984 with H and h distributors GST15i5)	61984 (60320 with coding white)
Approvals (may vary depending on the type)	VDE, UL, CSA These can be found in detail in our eShop	VDE, UL, CSA These can be found in detail in our eShop	VDE, UL These can be found in detail in our eShop

NRG 2.5/4 cable	NRG 2.5/4 adapter	NRG 10 cable	NRG 10 adapter	BST	MST®
5, 5+2	2, 3, 5	5	5	2, 3	3…6
Cable, end cap, cable scissors, accessories	Feed, output adapter	Cable, end cap, cable scissors, accessories	Feed, output adapter	Plug connector, solder connector, snap-in, distributor, cable assembly, accessories	snap-in, distributor, cable assembly, accessories
Depends on the cable Mains part of the cable: Mains 250/400 V Mains 250 V + non-SELV Bus of the cable: 50 V SELV 250 V non-SELV	GST18: Mains 250 V / mains 250/400 V Mains 250 V + non-SELV BST14: 50 V SELV GST15: 250 V non-SELV	Mains 250/400 V	Mains 250 V / mains 250/400 V	SELV (KNX) SELV	Mains 250 V / mains 250/400 V Mains 250 V + “high integrity earth” Mains 250 V + emergency Mains 250 V + non-SELV Mains 250 V + emergency + non-SELV Mains 250 V + LON
mechanical, optical (color)	mechanical, optical (color)	mechanical, optical (color)	mechanical, optical (color)	mechanical, optical (color)	mechanical, optical (color)
Yes	Yes	Yes	Yes	Yes	Yes
X	Yes, depending on the connector plug	X	X	Self-locking, can be overpulled without a tool, integrated	Self-locking, Able to be released with a tool, Integrated
X	IP20	X	IP20	IP20 (inserted IP40)	IP20 (inserted IP40)
-5 … +70	-5 … +40	-5 … +70	+5 … +40 for installation -5 … +40 during operation	-5 … +40	-5 … +40 (SPUR with 10 A fuse up to +35 °C)
Please refer to our eShop	Please refer to our eShop	Please refer to our eShop	Please refer to our eShop	Please refer to our eShop	Please refer to our eShop
X	X	X	X	2,54	X
X	X	X	X	Male 3.25; female 3.4	X
X	X	X	X	black	black
20	20	50	32	3	Coding C1: 32 (depending on the cable used)
Bus shielded for SELV applications: 3 Bus unshielded for non-SELV applications: 6	identical to connector plug	X	Feed: 50	X	Coding C2: 25 Coding C3...C8: 20 (depending on the cable used)
600/1000	2/3-pole: 250 5-pole: 250/400	600/1000	400/690	SELV	250, 250/400
Bus shielded: SELV Bus unshielded: 250	SELV adapter: SELV Non-SELV combi-adapter: 250	X	X	X	LON cable of C8: as per LON
4 kV overvoltage category III	4 kV overvoltage category III	6 kV overvoltage category III	6 kV overvoltage category III	0.8 kV overvoltage category III	4 kV overvoltage category III
X	2	X	3	2	2
Please refer to our eShop	61535, 60998-1, 60998-2-3, KNX manual	Please refer to our eShop	60670, 60999, 60998-1, 60998-2-3	61984, KNX manual	61535 connector itself
VDE	VDE	VDE	VDE	X	ASTA, UL/CSA

TECHNICAL DATA

	GST18®	GST15	GST08
Materials used			
Standard insulation material	PA, halogen-free, UL 94 V-0	PA, halogen-free, UL 94 V-2	PA6.6
No-flame insulation material	PA, halogen-free and flame-resistant, UL 94 V-0	PA6, halogen-free and flame-resistant, UL 94 V-2	X
Contact material	CuZn, tin-plated or silver-coated depen-ding on the model	CuZn, silver-coated	CuSn, tin-plated
Terminal material	Spring force: spring steel and wrought copper alloy Screw: steel, galvanized IDC: wrought copper alloy	Screw: steel, galvanized	X
Strain relief material	PA	PA	PVC, molded
Connection technology			
Available connection technology	Screw Spring Crimp Soldering connection IDC	Screw Soldering connection	Crimp Soldering connection
Connection cross-sectional areas (these can be found in detail in our eShop)	Can be found on the relevant product page, the manual instruction and in the eShop	Can be found on the relevant product page, the manual instruction and in the eShop	X
Screw connection torque in Nm	0,5	0,5	X
Piercing torque in Nm	X	X	X
Strain relief torque in Nm	0,5 … 0,7	0,5 … 0,7	X
Strain relief area	Can be found on the relevant product page and in the eShop	Can be found on the relevant product page and in the eShop	X
Configuration of free end with cable assembly	ultrason. welded	ultrason. welded	ferrule without insulating collar
Cable information			
Cable color	black (white with white coding)	white (black with black and brown coding)	white with white strain relief, black with black strain relief
Cable sheathing material	H05VV-F, H05Z1Z1-F, H05V2V2-F, H07RN-F, RZ1-K 0,6/1 kV	H05VV-F, H05Z1Z1-F, H05V2V2-F	GST0i8i2 0,5 mm²: LiYZ GST0i8i2 0,75 mm²: H03VVH2-F, H03V2V2H2-F, H03Z1Z1H2-F GST08i3: H03VV-F
Cable structure	Fine-stranded	Fine-stranded	Fine-stranded
Dimensions in mm	Depends on the cable	Depends on the cable	Depends on the cable
Minimum bending radius in mm	Depends on the cable	Depends on the cable	Depends on the cable
Fire resistance	Depends on the cable	Depends on the cable	Depends on the cable

NRG 2.5/4 cable	NRG 2.5/4 adapter	NRG 10 cable	NRG 10 adapter	BST	MST®
X	PA6 GF, flame-resistant and halogen-free, UL 94 V-2	X	PA66 GF, flame-resistant and halogen-free, UL 94 V-0	PA6 GF, flame-resistant and halogen-free, UL 94 V-2	Connector interface: PA6 GF Contact holder: PA666 Cover: PA6 GF
X	X	X	X	X	X
X	Feed clamping element: CuZn, tin-plated	X	Output adapter clamping element: CuZn, nickel-plated	CuBe, selectively gold-plated	CuZn, silver-coated
X	Piercing screw: CuZn, silver-coated	X	Piercing screw: CuZn, silver-coated	same as contact material	CuZn, silver-coated
X	Feed: PA6 GF, flame-resistant and halogen-free, UL 94 V-2	X	PA66 GF, flame-resistant and halogen-free, UL 94 V-0	PA	PA66, flame-resistant and halogen-free, UL 94 V-2
X	Piercing and screw	X	Piercing and screw	Spring, soldering con-nection	Crimp
X	Can be found on the relevant product page, the manual instruction and in the eShop	X	Can be found on the relevant product page, the manual instruction and in the eShop	Can be found on the relevant product page, the manual instruction and in the eShop	X
X	0,5	X	0,8	X	X
X	0,5	x	1	X	X
X	0,6	X	0,6 … 0,8	X	X
X	Can be found on the relevant product page and in the eShop	X	Can be found on the relevant product page and in the eShop	Can be found on the relevant product page and in the eShop	X
X	X	X	X	stripped	7-strands stripped Fine-stranded ultrasoni-cally welded
green (5-pole mains, 5+2 mains+SELV) black (5-pole mains, 5+2 mains+non-SELV) pastel blue (3-pole mains+non-SELV)	X	green	X	can be found on the relevant product page and in the eShop	Metal hose silver Sheathed cable white
contains halogen, halogen-free	X	contains halogen, halogen-free	X	FB-2Y(ST)Y 2x2x0,8 FB-H(ST) 2x2x0,8 L03VV-U L03Z1Z1-U	Single cores in metal hose H07Z-R halogen-free, H05VV-F, H05Z1Z1-F
Fine-stranded	X	Fine-stranded	X	Rigid	7-strands Fine-stranded
5-pole 27,5 x 6,3; 5+2-pole 36,9 x 6,3	X	38,5 x 10	X	Depends on the cable	Depends on the cable, metal conduit D 16 mm
10x cable diameter flat side	X	10x cable diameter flat side	X	Depends on the cable	Depends on the cable
Self-extinguishing	X	Self-extinguishing	X	Depends on the cable	Depends on the cable

INDEX

PART NUMBER | PU | PAGE

00.702.0306.7	1 m	**147**
00.709.0306.7	1 m	**147**
00.710.0303.1	1 m	**146**
00.710.0303.6	1 m	**146**
00.710.0303.7	1 m	**146**
00.710.0304.1	1 m	**146**
00.710.0304.6	1 m	**146**
00.710.0304.7	1 m	**146**
00.710.0323.7	1 m	**146**
00.710.0324.7	1 m	**146**
00.710.1323.1	1 m	**147**
00.710.1324.1	1 m	**147**
00.712.0303.1	1 m	**146**
00.712.0303.6	1 m	**146**
00.712.0303.7	1 m	**146**
00.712.0323.7	1 m	**146**
00.712.1323.1	1 m	**147**
00.770.0303.1	1 m	**146**
00.770.0303.6	1 m	**146**
00.770.0303.7	1 m	**146**
00.770.0304.1	1 m	**146**
00.770.0304.6	1 m	**146**
00.770.0304.7	1 m	**146**
00.770.0306.7	1 m	**147**
00.770.0323.7	1 m	**146**
00.770.0324.7	1 m	**146**
00.770.1323.1	1 m	**147**
00.770.1324.1	1 m	**147**
05.561.3653.0	100 pcs	**73**
05.561.3653.1	100 pcs	**73**
05.563.7753.0	100 pcs	**143**
05.563.7853.0	100 pcs	**143**
05.563.9553.0	10 pcs	**152**
05.564.5353.0	10 pcs	**73**
05.564.5353.2	10 pcs	**73**
05.566.9153.0	100 pcs	**74**
05.566.9253.0	100 pcs	**74**
05.583.1853.0	100 pcs	**74**
05.587.3156.0	100 pcs	**75**
05.587.3156.1	100 pcs	**75**
05.588.5753.0	50 pcs	**75**
05.588.5753.1	50 pcs	**75**
05.590.4556.0	50 pcs	**75**
05.590.4556.1	50 pcs	**75**
05.594.4250.0	100 pcs	**74**
05.594.4253.0	100 pcs	**74**
05.595.1453.0	100 pcs	**75**
05.595.1453.2	100 pcs	**75**
06.502.5810.0	1 pc	**151**
06.502.5910.0	1 pc	**151**
06.502.6000.0	1 pc	**151**
06.560.0300.0	1 pc	**73**
06.561.7853.0	50 pcs	**73**
06.562.0653.0	10 pcs	**151**
06.562.0753.1	50 pcs	**75**
06.562.3100.0	100 pcs	**124**
06.562.3200.0	1 pc	**124**
06.562.4353.0	10 pcs	**151**
06.562.6153.1	50 pcs	**75**
06.562.9753.0	10 pcs	**152**
06.564.1753.0	10 pcs	**151**
07.413.6853.0	50 pcs	**73**
07.413.6853.1	50 pcs	**73**
07.418.9153.1	50 pcs	**114**
07.418.9253.1	50 pcs	**114**
07.425.8453.0	100 pcs	**143**
07.425.8753.0	100 pcs	**74**
07.425.8753.1	100 pcs	**74**
07.425.8853.0	100 pcs	**74**
07.425.8953.0	100 pcs	**74**
34.300.1122.1	1 pc	**73**
34.399.1673.1		**173**
84.990.1242.0	1 pc	**76**
84.990.1243.0	1 pc	**76**
90.000.0153.0	1000 pcs	**119**
90.001.0153.0	200 pcs	**118**
90.002.0153.0	200 pcs	**118**
90.010.0153.0	1000 pcs	**119**
90.011.0153.0	200 pcs	**118**
90.012.0153.0	200 pcs	**118**
90.020.0153.0	1000 pcs	**119**
90.021.0153.0	100 pcs	**118**
90.022.0153.0	100 pcs	**118**
90.030.0153.0	1000 pcs	**119**
90.031.0153.0	200 pcs	**118**
90.032.0153.0	200 pcs	**118**
90.200.0513.2	100 pcs	**122**
90.200.0514.2	100 pcs	**123**
90.200.0523.2	100 pcs	**122**
90.200.0524.2	300 pcs	**123**
90.200.0525.2	300 pcs	**123**
90.200.1010.2	50 pcs	**122**
90.200.1020.2	250 pcs	**122**
90.200.1024.2	250 pcs	**123**
90.200.3010.2	50 pcs	**122**
90.200.3020.2	75 pcs	**122**
90.200.3023.2	75 pcs	**122**
90.210.0313.2	50 pcs	**122**
90.210.0323.2	100 pcs	**122**
90.210.0324.2	100 pcs	**123**
90.210.0513.2	50 pcs	**122**
90.210.0514.2	50 pcs	**123**
90.210.0523.2	100 pcs	**122**
90.210.0524.2	100 pcs	**123**
90.210.0525.2	300 pcs	**123**
90.210.0543.2	100 pcs	**122**
90.210.0544.2	100 pcs	**123**
90.210.1010.2	50 pcs	**122**
90.210.1014.2	50 pcs	**123**
90.210.1020.2	250 pcs	**122**
90.210.1023.2	600 pcs	**122**
90.210.1024.2	250 pcs	**123**
90.210.2010.2	50 pcs	**122**
90.210.2013.2	50 pcs	**122**
90.210.2020.2	125 pcs	**122**
90.210.2023.2	500 pcs	**122**
90.210.2510.2	50 pcs	**122**
90.210.2514.2	50 pcs	**123**
90.210.2520.2	100 pcs	**122**
90.210.2524.2	100 pcs	**123**
90.210.3010.2	50 pcs	**122**
90.210.3013.2	50 pcs	**122**
90.210.3020.2	75 pcs	**122**
90.210.3023.2	75 pcs	**122**
90.210.3026.2	100 pcs	**119**
90.210.3040.2	75 pcs	**122**
90.210.4010.2	100 pcs	**122**
90.210.4013.2	50 pcs	**122**
90.210.4020.2	100 pcs	**122**
90.210.5010.2	50 pcs	**122**
90.210.5013.2	50 pcs	**122**
90.210.5014.2	50 pcs	**123**
90.210.5020.2	50 pcs	**122**
90.210.5023.2	500 pcs	**122**
90.210.5024.2	100 pcs	**123**
90.215.0530.2	100 pcs	**120**
90.215.0533.2	100 pcs	**120**
90.215.0534.2	100 pcs	**121**
90.215.1030.2	125 pcs	**120**
90.215.1033.2	125 pcs	**120**
90.215.1034.2	125 pcs	**121**
90.215.1530.2	150 pcs	**120**
90.215.1533.2	150 pcs	**120**
90.215.1534.2	150 pcs	**121**
90.220.0523.2	500 pcs	**122**
90.220.0524.2	500 pcs	**123**
90.220.1020.2	250 pcs	**122**
90.220.3010.2	50 pcs	**122**
90.220.3020.2	75 pcs	**122**
90.230.0513.2	50 pcs	**122**
90.230.0514.2	50 pcs	**123**
90.230.0523.2	100 pcs	**122**
90.230.0524.2	100 pcs	**123**
90.230.0525.2	300 pcs	**123**
90.230.0526.2	250 pcs	**119**
90.230.0544.2	100 pcs	**123**
90.230.1010.2	50 pcs	**122**
90.230.1020.2	250 pcs	**122**
90.230.1040.2	250 pcs	**122**
90.230.2014.2	50 pcs	**123**
90.230.2024.2	600 pcs	**123**
90.230.3010.2	50 pcs	**122**
90.230.3020.2	75 pcs	**122**
90.230.3040.2	75 pcs	**122**
90.240.0503.2	300 pcs	**127**
90.240.0504.2	400 pcs	**128**
90.240.0505.2	300 pcs	**128**
90.240.0506.2	150 pcs	**126**
90.240.1000.2	150 pcs	**127**
90.240.3000.2	50 pcs	**127**
91.002.5453.0	1 pc	**114**
91.020.1053.0	100 pcs	**82**
91.020.1053.1	100 pcs	**82**
91.020.1253.0	100 pcs	**82**
91.020.1453.0	100 pcs	**82**
91.020.1853.0	100 pcs	**82**
91.020.4953.0	100 pcs	**82**
91.020.4953.1	100 pcs	**82**
91.020.5053.0	100 pcs	**82**
91.020.5153.0	100 pcs	**82**
91.020.5353.0	100 pcs	**82**
91.020.5453.0	5 pcs	**149**
91.020.5953.0	100 pcs	**82**
91.020.5953.1	100 pcs	**82**
91.020.6053.0	100 pcs	**82**
91.020.6153.0	100 pcs	**82**
91.020.6353.0	100 pcs	**82**
91.020.7053.0	100 pcs	**82**
91.020.7053.1	100 pcs	**82**
91.020.7153.0	100 pcs	**82**
91.020.7253.0	100 pcs	**82**
91.020.7453.0	100 pcs	**82**
91.021.0053.0	100 pcs	**81**
91.021.0053.1	100 pcs	**81**
91.021.0153.0	100 pcs	**81**
91.021.0153.1	100 pcs	**81**
91.021.0253.0	100 pcs	**81**
91.021.0353.0	100 pcs	**81**
91.021.0453.0	100 pcs	**81**
91.021.0553.0	100 pcs	**81**
91.021.1053.0	100 pcs	**81**
91.021.1153.0	100 pcs	**81**
91.021.5453.0	5 pcs	**149**
91.022.0053.0	100 pcs	**81**
91.022.0053.1	100 pcs	**81**
91.022.0153.0	100 pcs	**81**
91.022.0153.1	100 pcs	**81**
91.022.0253.0	100 pcs	**81**
91.022.0353.0	100 pcs	**81**
91.022.0453.0	100 pcs	**81**
91.022.0553.0	100 pcs	**81**
91.022.1053.0	100 pcs	**81**
91.022.1153.0	100 pcs	**81**
91.023.0053.0	100 pcs	**81**
91.023.0053.1	100 pcs	**81**
91.023.0153.0	100 pcs	**81**
91.023.0153.1	100 pcs	**81**
91.023.0253.0	100 pcs	**81**
91.023.0353.0	100 pcs	**81**
91.023.0453.0	100 pcs	**81**
91.023.0553.0	100 pcs	**81**
91.023.1053.0	100 pcs	**81**
91.023.1153.0	100 pcs	**81**
91.024.0053.0	100 pcs	**81**
91.024.0053.1	100 pcs	**81**
91.024.0153.0	100 pcs	**81**
91.024.0153.1	100 pcs	**81**
91.024.0253.0	100 pcs	**81**
91.024.0353.0	100 pcs	**81**
91.024.0453.0	100 pcs	**81**
91.024.0553.0	100 pcs	**81**
91.024.1053.0	100 pcs	**81**
91.024.1153.0	100 pcs	**81**
91.030.1053.0	100 pcs	**92**
91.030.1053.1	100 pcs	**92**
91.030.4953.0	100 pcs	**92**
91.030.4953.1	100 pcs	**92**
91.030.5253.0	100 pcs	**92**
91.030.5253.1	100 pcs	**92**
91.030.5853.0	100 pcs	**92**
91.030.5853.1	100 pcs	**92**
91.030.5953.0	100 pcs	**92**
91.030.5953.1	100 pcs	**92**
91.030.6053.0	100 pcs	**92**
91.030.6053.1	100 pcs	**92**
91.031.0053.0	100 pcs	**91**
91.031.0053.1	100 pcs	**91**
91.031.0153.0	100 pcs	**90**
91.031.0153.1	100 pcs	**90**
91.031.0653.0	100 pcs	**91**
91.031.0753.0	100 pcs	**90**
91.032.0053.0	100 pcs	**91**
91.032.0053.1	100 pcs	**91**
91.032.0153.0	100 pcs	**90**
91.032.0153.1	100 pcs	**90**
91.032.0653.0	100 pcs	**91**
91.032.0753.0	100 pcs	**90**
91.033.0053.0	100 pcs	**90**
91.033.0053.1	100 pcs	**90**
91.033.0153.0	100 pcs	**90**
91.033.0153.1	100 pcs	**90**
91.033.0653.0	100 pcs	**90**
91.033.0753.0	100 pcs	**90**
91.034.0053.0	100 pcs	**90**
91.034.0053.1	100 pcs	**90**
91.034.0153.0	100 pcs	**90**
91.034.0153.1	100 pcs	**90**
91.034.0653.0	100 pcs	**90**
91.034.0753.0	100 pcs	**90**
91.040.5953.0	100 pcs	**100**
91.040.5953.1	100 pcs	**100**
91.041.0050.0	100 pcs	**99**
91.041.0050.1	100 pcs	**99**
91.041.0053.0	100 pcs	**99**
91.041.0053.1	100 pcs	**99**
91.041.0150.0	100 pcs	**98**
91.041.0150.1	100 pcs	**98**
91.041.0153.0	100 pcs	**99**
91.041.0153.1	100 pcs	**99**
91.041.1250.0	100 pcs	**99**

INDEX

PART NUMBER | PU | PAGE

91.041.1350.0	100 pcs	98
91.041.1450.0	100 pcs	99
91.041.1550.0	100 pcs	98
91.042.0050.0	100 pcs	99
91.042.0050.1	100 pcs	99
91.042.0053.0	100 pcs	99
91.042.0053.1	100 pcs	99
91.042.0150.0	100 pcs	98
91.042.0150.1	100 pcs	98
91.042.0153.0	100 pcs	99
91.042.0153.1	100 pcs	99
91.042.1350.0	100 pcs	98
91.042.1350.0	100 pcs	99
91.042.1450.0	100 pcs	99
91.042.1550.0	100 pcs	98
91.043.0050.0	100 pcs	98
91.043.0050.1	100 pcs	98
91.043.0053.0	100 pcs	99
91.043.0053.1	100 pcs	99
91.043.0150.0	100 pcs	98
91.043.0150.1	100 pcs	98
91.043.0153.0	100 pcs	99
91.043.0153.1	100 pcs	99
91.043.1250.0	100 pcs	98
91.043.1350.0	100 pcs	98
91.043.1450.0	100 pcs	98
91.043.1550.0	100 pcs	98
91.044.0050.0	100 pcs	98
91.044.0050.1	100 pcs	98
91.044.0053.0	100 pcs	99
91.044.0053.1	100 pcs	99
91.044.0150.0	100 pcs	98
91.044.0150.1	100 pcs	98
91.044.0153.0	100 pcs	99
91.044.0153.1	100 pcs	99
91.044.1250.0	100 pcs	98
91.044.1350.0	100 pcs	98
91.044.1450.0	100 pcs	98
91.044.1550.0	100 pcs	98
91.050.3151.0	100 pcs	107
91.050.3251.0	100 pcs	107
91.050.3351.0	100 pcs	107
91.050.4953.0	100 pcs	107
91.050.4953.1	100 pcs	107
91.050.5053.0	100 pcs	107
91.050.5153.0	100 pcs	107
91.050.5253.0	100 pcs	107
91.050.5353.0	100 pcs	107
91.050.5953.0	100 pcs	107
91.050.5953.1	100 pcs	107
91.050.6053.0	100 pcs	107
91.050.6153.0	100 pcs	107
91.050.7053.0	100 pcs	107
91.050.7053.1	100 pcs	107
91.050.7153.0	100 pcs	107
91.050.7253.0	100 pcs	107
91.050.7353.0	100 pcs	107
91.050.7453.0	100 pcs	107
91.051.0053.0	100 pcs	106
91.051.0053.1	100 pcs	106
91.051.0153.0	100 pcs	105
91.051.0153.1	100 pcs	105
91.051.0253.0	100 pcs	106
91.051.0353.0	100 pcs	105
91.051.0453.0	100 pcs	106
91.051.0553.0	100 pcs	105
91.051.1253.0	100 pcs	106
91.051.1353.0	100 pcs	105
91.051.1453.0	100 pcs	106
91.051.1553.0	100 pcs	105
91.052.0053.0	100 pcs	106
91.052.0053.1	100 pcs	106
91.052.0153.0	100 pcs	105
91.052.0153.1	100 pcs	105
91.052.0253.0	100 pcs	106
91.052.0353.0	100 pcs	105
91.052.0453.0	100 pcs	106
91.052.0553.0	100 pcs	105
91.052.1253.0	100 pcs	106
91.052.1353.0	100 pcs	105
91.052.1453.0	100 pcs	106
91.052.1553.0	100 pcs	105
91.053.0053.0	100 pcs	105
91.053.0053.1	100 pcs	105
91.053.0153.0	100 pcs	105
91.053.0153.1	100 pcs	105
91.053.0253.0	100 pcs	105
91.053.0353.0	100 pcs	105
91.053.0453.0	100 pcs	105
91.053.0553.0	100 pcs	105
91.053.1253.0	100 pcs	105
91.053.1353.0	100 pcs	105
91.053.1453.0	100 pcs	105
91.053.1553.0	100 pcs	105
91.054.0053.0	100 pcs	105
91.054.0053.1	100 pcs	105
91.054.0153.0	100 pcs	105
91.054.0153.1	100 pcs	105
91.054.0253.0	100 pcs	105
91.054.0353.0	100 pcs	105
91.054.0453.0	100 pcs	105
91.054.0553.0	100 pcs	105
91.054.1253.0	100 pcs	105
91.054.1353.0	100 pcs	105
91.054.1453.0	100 pcs	105
91.054.1553.0	100 pcs	105
91.207.1000.2	50 pcs	101
91.207.1003.2	50 pcs	102
91.207.1004.2	50 pcs	103
91.207.1050.2	50 pcs	101
91.207.1053.2	50 pcs	102
91.207.1054.2	50 pcs	103
91.207.1060.2	50 pcs	101
91.207.1063.2	50 pcs	102
91.207.1064.2	50 pcs	103
91.207.1070.2	50 pcs	101
91.207.1073.2	50 pcs	102
91.207.1074.2	50 pcs	103
91.207.2000.2	25 pcs	101
91.207.2003.2	25 pcs	102
91.207.2004.2	25 pcs	103
91.207.2050.2	25 pcs	101
91.207.2060.2	25 pcs	101
91.207.2070.2	25 pcs	101
91.207.3000.2	20 pcs	101
91.207.3003.2	20 pcs	102
91.207.3004.2	20 pcs	103
91.207.3050.2	20 pcs	101
91.207.3053.2	20 pcs	102
91.207.3060.2	20 pcs	101
91.207.3063.2	20 pcs	102
91.207.3070.2	20 pcs	101
91.207.3073.2	20 pcs	102
91.207.4000.2	15 pcs	101
91.207.4004.2	15 pcs	103
91.207.4050.2	15 pcs	101
91.207.4060.2	15 pcs	101
91.207.4070.2	15 pcs	101
91.207.5000.2	10 pcs	101
91.207.5003.2	10 pcs	102
91.207.5004.2	10 pcs	103
91.207.5053.2	10 pcs	102
91.207.5063.2	10 pcs	102
91.207.5073.2	10 pcs	102
91.207.6004.2	10 pcs	103
91.207.6050.2	10 pcs	101
91.207.6060.2	10 pcs	101
91.207.6070.2	10 pcs	101
91.207.7004.2	5 pcs	103
91.207.8000.2	5 pcs	101
91.207.8004.2	5 pcs	103
91.207.8050.2	10 pcs	101
91.207.8060.2	10 pcs	101
91.207.8070.2	10 pcs	101
91.222.1000.1	100 pcs	83
91.222.1000.2	100 pcs	83
91.222.1000.6	100 pcs	83
91.222.1000.9	100 pcs	83
91.222.1003.1	100 pcs	85
91.222.1003.2	100 pcs	85
91.222.1003.6	100 pcs	85
91.222.1003.9	100 pcs	85
91.222.1004.1	100 pcs	87
91.222.1004.2	100 pcs	87
91.222.1004.6	100 pcs	87
91.222.1004.9	100 pcs	87
91.222.1050.1	100 pcs	83
91.222.1050.2	100 pcs	83
91.222.1050.6	100 pcs	83
91.222.1050.9	100 pcs	83
91.222.1053.1	100 pcs	85
91.222.1053.2	100 pcs	85
91.222.1053.6	100 pcs	85
91.222.1053.9	100 pcs	85
91.222.1054.1	100 pcs	87
91.222.1054.2	100 pcs	87
91.222.1054.6	100 pcs	87
91.222.1054.9	100 pcs	87
91.222.1060.1	100 pcs	84
91.222.1060.2	100 pcs	84
91.222.1060.9	100 pcs	84
91.222.1063.1	100 pcs	86
91.222.1063.2	100 pcs	86
91.222.1063.6	100 pcs	86
91.222.1063.9	100 pcs	86
91.222.1064.1	100 pcs	88
91.222.1064.2	100 pcs	88
91.222.1064.9	100 pcs	88
91.222.1070.1	100 pcs	83
91.222.1070.2	100 pcs	83
91.222.1070.6	100 pcs	83
91.222.1070.9	100 pcs	83
91.222.1073.1	100 pcs	85
91.222.1073.2	100 pcs	85
91.222.1073.6	100 pcs	85
91.222.1073.9	100 pcs	85
91.222.1074.1	100 pcs	87
91.222.1074.2	100 pcs	87
91.222.1074.6	100 pcs	87
91.222.1074.9	100 pcs	87
91.222.2000.1	50 pcs	83
91.222.2000.2	50 pcs	83
91.222.2000.6	50 pcs	83
91.222.2000.9	50 pcs	83
91.222.2003.1	50 pcs	85
91.222.2003.2	50 pcs	85
91.222.2003.6	50 pcs	85
91.222.2003.9	50 pcs	85
91.222.2004.1	50 pcs	87
91.222.2004.2	50 pcs	87
91.222.2004.6	50 pcs	87
91.222.2004.9	50 pcs	87
91.222.2050.1	50 pcs	83
91.222.2050.2	50 pcs	83
91.222.2050.6	50 pcs	83
91.222.2050.9	50 pcs	83
91.222.2053.1	50 pcs	85
91.222.2053.2	50 pcs	85
91.222.2053.6	50 pcs	85
91.222.2053.9	50 pcs	85
91.222.2054.1	50 pcs	87
91.222.2054.2	50 pcs	87
91.222.2054.6	50 pcs	87
91.222.2054.9	50 pcs	87
91.222.2060.1	50 pcs	84
91.222.2060.2	50 pcs	84
91.222.2060.9	50 pcs	84
91.222.2063.1	50 pcs	86
91.222.2063.2	50 pcs	86
91.222.2063.9	50 pcs	86
91.222.2064.1	50 pcs	88
91.222.2064.2	50 pcs	88
91.222.2064.9	50 pcs	88
91.222.2070.1	50 pcs	83
91.222.2070.2	50 pcs	83
91.222.2070.6	50 pcs	83
91.222.2070.9	50 pcs	83
91.222.2073.1	50 pcs	85
91.222.2073.2	50 pcs	85
91.222.2073.6	50 pcs	85
91.222.2073.9	50 pcs	85
91.222.2074.1	50 pcs	87
91.222.2074.2	50 pcs	87
91.222.2074.6	50 pcs	87
91.222.2074.9	50 pcs	87
91.222.3000.1	25 pcs	83
91.222.3000.2	25 pcs	83
91.222.3000.6	25 pcs	83
91.222.3000.9	30 pcs	83
91.222.3003.1	50 pcs	85
91.222.3003.2	50 pcs	85
91.222.3003.6	25 pcs	85
91.222.3003.9	25 pcs	85
91.222.3004.1	50 pcs	87
91.222.3004.2	50 pcs	87
91.222.3004.6	50 pcs	87
91.222.3004.9	30 pcs	87
91.222.3050.1	25 pcs	83
91.222.3050.2	25 pcs	83
91.222.3050.6	25 pcs	83
91.222.3050.9	30 pcs	83
91.222.3053.1	50 pcs	85
91.222.3053.2	50 pcs	85
91.222.3053.6	25 pcs	85
91.222.3053.9	25 pcs	85
91.222.3054.1	50 pcs	87
91.222.3054.2	50 pcs	87
91.222.3054.6	50 pcs	87
91.222.3054.9	30 pcs	87
91.222.3060.1	25 pcs	84
91.222.3060.2	25 pcs	84
91.222.3060.9	25 pcs	84
91.222.3063.1	25 pcs	86
91.222.3063.2	25 pcs	86
91.222.3063.9	25 pcs	86
91.222.3064.1	25 pcs	88
91.222.3064.2	25 pcs	88
91.222.3064.9	25 pcs	88
91.222.3070.1	25 pcs	83
91.222.3070.2	25 pcs	83

INDEX

PART NUMBER | PU | PAGE

91.222.3070.6	25 pcs	**83**
91.222.3070.9	30 pcs	**83**
91.222.3073.1	50 pcs	**85**
91.222.3073.2	50 pcs	**85**
91.222.3073.6	25 pcs	**85**
91.222.3073.9	25 pcs	**85**
91.222.3074.1	50 pcs	**87**
91.222.3074.2	50 pcs	**87**
91.222.3074.6	50 pcs	**87**
91.222.3074.9	30 pcs	**87**
91.222.4000.1	25 pcs	**83**
91.222.4000.2	25 pcs	**83**
91.222.4000.6	25 pcs	**83**
91.222.4000.9	25 pcs	**83**
91.222.4003.1	30 pcs	**85**
91.222.4003.2	30 pcs	**85**
91.222.4003.6	25 pcs	**85**
91.222.4003.9	25 pcs	**85**
91.222.4004.1	30 pcs	**87**
91.222.4004.2	30 pcs	**87**
91.222.4004.6	25 pcs	**87**
91.222.4004.9	25 pcs	**87**
91.222.4050.1	25 pcs	**83**
91.222.4050.2	25 pcs	**83**
91.222.4050.6	25 pcs	**83**
91.222.4050.9	25 pcs	**83**
91.222.4053.1	30 pcs	**85**
91.222.4053.2	30 pcs	**85**
91.222.4053.6	25 pcs	**85**
91.222.4053.9	25 pcs	**85**
91.222.4054.1	30 pcs	**87**
91.222.4054.2	30 pcs	**87**
91.222.4054.6	25 pcs	**87**
91.222.4054.9	25 pcs	**87**
91.222.4060.1	25 pcs	**84**
91.222.4060.2	25 pcs	**84**
91.222.4060.9	25 pcs	**84**
91.222.4063.1	25 pcs	**86**
91.222.4063.9	25 pcs	**86**
91.222.4064.9	25 pcs	**88**
91.222.4070.1	25 pcs	**83**
91.222.4070.2	25 pcs	**83**
91.222.4070.6	25 pcs	**83**
91.222.4070.9	25 pcs	**83**
91.222.4073.1	30 pcs	**85**
91.222.4073.2	30 pcs	**85**
91.222.4073.6	25 pcs	**85**
91.222.4073.9	25 pcs	**85**
91.222.4074.1	30 pcs	**87**
91.222.4074.2	30 pcs	**87**
91.222.4074.6	25 pcs	**87**
91.222.4074.9	25 pcs	**87**
91.222.5000.1	20 pcs	**83**
91.222.5000.2	20 pcs	**83**
91.222.5000.6	20 pcs	**83**
91.222.5000.9	20 pcs	**83**
91.222.5003.1	25 pcs	**85**
91.222.5003.2	25 pcs	**85**
91.222.5003.6	20 pcs	**85**
91.222.5003.9	20 pcs	**85**
91.222.5004.1	25 pcs	**87**
91.222.5004.2	25 pcs	**87**
91.222.5004.6	20 pcs	**87**
91.222.5004.9	20 pcs	**87**
91.222.5050.1	20 pcs	**83**
91.222.5050.2	20 pcs	**83**
91.222.5050.6	20 pcs	**83**
91.222.5050.9	20 pcs	**83**
91.222.5053.1	25 pcs	**85**
91.222.5053.2	25 pcs	**85**
91.222.5053.6	20 pcs	**85**
91.222.5053.9	20 pcs	**85**
91.222.5054.1	25 pcs	**87**
91.222.5054.2	25 pcs	**87**
91.222.5054.6	20 pcs	**87**
91.222.5054.9	20 pcs	**87**
91.222.5060.1	20 pcs	**84**
91.222.5060.2	20 pcs	**84**
91.222.5060.9	20 pcs	**84**
91.222.5063.9	20 pcs	**86**
91.222.5064.2	20 pcs	**88**
91.222.5064.9	20 pcs	**88**
91.222.5070.1	20 pcs	**83**
91.222.5070.2	20 pcs	**83**
91.222.5070.6	20 pcs	**83**
91.222.5070.9	20 pcs	**83**
91.222.5073.1	25 pcs	**85**
91.222.5073.2	25 pcs	**85**
91.222.5073.6	20 pcs	**85**
91.222.5073.9	20 pcs	**85**
91.222.5074.1	25 pcs	**87**
91.222.5074.2	25 pcs	**87**
91.222.5074.6	20 pcs	**87**
91.222.5074.9	20 pcs	**87**
91.222.6000.1	20 pcs	**83**
91.222.6000.2	20 pcs	**83**
91.222.6000.6	20 pcs	**83**
91.222.6000.9	20 pcs	**83**
91.222.6003.1	20 pcs	**85**
91.222.6003.2	20 pcs	**85**
91.222.6003.6	20 pcs	**85**
91.222.6003.9	20 pcs	**85**
91.222.6004.1	20 pcs	**87**
91.222.6004.2	20 pcs	**87**
91.222.6004.6	20 pcs	**87**
91.222.6004.9	20 pcs	**87**
91.222.6050.1	20 pcs	**83**
91.222.6050.2	20 pcs	**83**
91.222.6050.6	20 pcs	**83**
91.222.6050.9	20 pcs	**83**
91.222.6053.1	20 pcs	**85**
91.222.6053.2	20 pcs	**85**
91.222.6053.6	20 pcs	**85**
91.222.6053.9	20 pcs	**85**
91.222.6054.1	20 pcs	**87**
91.222.6054.2	20 pcs	**87**
91.222.6054.6	20 pcs	**87**
91.222.6054.9	20 pcs	**87**
91.222.6060.1	20 pcs	**84**
91.222.6060.2	20 pcs	**84**
91.222.6060.9	20 pcs	**84**
91.222.6063.9	20 pcs	**86**
91.222.6064.9	15 pcs	**88**
91.222.6070.1	20 pcs	**83**
91.222.6070.2	20 pcs	**83**
91.222.6070.6	20 pcs	**83**
91.222.6070.9	20 pcs	**83**
91.222.6073.1	20 pcs	**85**
91.222.6073.2	20 pcs	**85**
91.222.6073.6	20 pcs	**85**
91.222.6073.9	20 pcs	**85**
91.222.6074.1	20 pcs	**87**
91.222.6074.2	20 pcs	**87**
91.222.6074.6	20 pcs	**87**
91.222.6074.9	20 pcs	**87**
91.222.7000.1	15 pcs	**83**
91.222.7000.2	15 pcs	**83**
91.222.7000.6	15 pcs	**83**
91.222.7000.9	15 pcs	**83**
91.222.7003.1	20 pcs	**85**
91.222.7003.2	20 pcs	**85**
91.222.7003.6	15 pcs	**85**
91.222.7003.9	20 pcs	**85**
91.222.7004.1	20 pcs	**87**
91.222.7004.2	20 pcs	**87**
91.222.7004.6	15 pcs	**87**
91.222.7004.9	15 pcs	**87**
91.222.7050.1	15 pcs	**83**
91.222.7050.2	15 pcs	**83**
91.222.7050.6	15 pcs	**83**
91.222.7050.9	15 pcs	**83**
91.222.7053.1	20 pcs	**85**
91.222.7053.2	20 pcs	**85**
91.222.7053.6	15 pcs	**85**
91.222.7054.1	20 pcs	**87**
91.222.7054.2	20 pcs	**87**
91.222.7054.6	15 pcs	**87**
91.222.7054.9	15 pcs	**87**
91.222.7060.1	15 pcs	**84**
91.222.7060.2	15 pcs	**84**
91.222.7060.9	20 pcs	**84**
91.222.7063.9	15 pcs	**86**
91.222.7070.1	15 pcs	**83**
91.222.7070.2	15 pcs	**83**
91.222.7070.6	15 pcs	**83**
91.222.7070.9	15 pcs	**83**
91.222.7073.1	20 pcs	**85**
91.222.7073.2	20 pcs	**85**
91.222.7073.6	15 pcs	**85**
91.222.7074.1	20 pcs	**87**
91.222.7074.2	20 pcs	**87**
91.222.7074.6	15 pcs	**87**
91.222.7074.9	15 pcs	**87**
91.222.8000.1	15 pcs	**83**
91.222.8000.2	15 pcs	**83**
91.222.8000.6	10 pcs	**83**
91.222.8000.9	15 pcs	**83**
91.222.8003.1	15 pcs	**85**
91.222.8003.2	15 pcs	**85**
91.222.8003.6	10 pcs	**85**
91.222.8003.9	10 pcs	**85**
91.222.8004.1	15 pcs	**87**
91.222.8004.2	15 pcs	**87**
91.222.8004.6	15 pcs	**87**
91.222.8004.9	15 pcs	**87**
91.222.8050.1	15 pcs	**83**
91.222.8050.2	15 pcs	**83**
91.222.8050.6	10 pcs	**83**
91.222.8050.9	15 pcs	**83**
91.222.8053.1	15 pcs	**85**
91.222.8053.2	15 pcs	**85**
91.222.8053.6	10 pcs	**85**
91.222.8053.9	10 pcs	**85**
91.222.8054.1	15 pcs	**87**
91.222.8054.2	15 pcs	**87**
91.222.8054.6	15 pcs	**87**
91.222.8054.9	15 pcs	**87**
91.222.8060.1	10 pcs	**84**
91.222.8060.2	10 pcs	**84**
91.222.8060.9	10 pcs	**84**
91.222.8063.9	15 pcs	**86**
91.222.8064.9	10 pcs	**88**
91.222.8070.1	15 pcs	**83**
91.222.8070.2	15 pcs	**83**
91.222.8070.6	10 pcs	**83**
91.222.8070.9	15 pcs	**83**
91.222.8073.1	15 pcs	**85**
91.222.8073.2	15 pcs	**85**
91.222.8073.6	10 pcs	**85**
91.222.8073.9	10 pcs	**85**
91.222.8074.1	15 pcs	**87**
91.222.8074.2	15 pcs	**87**
91.222.8074.6	15 pcs	**87**
91.222.8074.9	15 pcs	**87**
91.232.1000.1	50 pcs	**93**
91.232.1000.2	50 pcs	**93**
91.232.1000.4	50 pcs	**93**
91.232.1003.1	50 pcs	**94**
91.232.1003.2	50 pcs	**94**
91.232.1003.4	50 pcs	**94**
91.232.1004.1	50 pcs	**95**
91.232.1004.2	50 pcs	**95**
91.232.1004.4	50 pcs	**95**
91.232.1009.1	50 pcs	**96**
91.232.1009.2	50 pcs	**96**
91.232.1050.1	50 pcs	**93**
91.232.1050.2	50 pcs	**93**
91.232.1053.1	50 pcs	**94**
91.232.1053.2	50 pcs	**94**
91.232.1054.1	50 pcs	**95**
91.232.1054.2	50 pcs	**95**
91.232.1060.1	50 pcs	**93**
91.232.1060.2	50 pcs	**93**
91.232.1063.1	50 pcs	**94**
91.232.1063.2	50 pcs	**94**
91.232.1064.1	50 pcs	**95**
91.232.1064.2	50 pcs	**95**
91.232.1069.2	50 pcs	**96**
91.232.1070.1	50 pcs	**93**
91.232.1070.2	50 pcs	**93**
91.232.1073.1	50 pcs	**94**
91.232.1073.2	50 pcs	**94**
91.232.1074.1	50 pcs	**95**
91.232.1074.2	50 pcs	**95**
91.232.2000.1	30 pcs	**93**
91.232.2000.2	30 pcs	**93**
91.232.2000.4	30 pcs	**93**
91.232.2003.1	30 pcs	**94**
91.232.2003.2	30 pcs	**94**
91.232.2003.4	30 pcs	**94**
91.232.2004.1	30 pcs	**95**
91.232.2004.2	30 pcs	**95**
91.232.2004.4	30 pcs	**95**
91.232.2009.1	30 pcs	**96**
91.232.2009.2	40 pcs	**96**
91.232.2050.1	30 pcs	**93**
91.232.2050.2	30 pcs	**93**
91.232.2053.1	30 pcs	**94**
91.232.2053.2	30 pcs	**94**
91.232.2054.1	30 pcs	**95**
91.232.2054.2	30 pcs	**95**
91.232.2060.1	30 pcs	**93**
91.232.2060.2	30 pcs	**93**
91.232.2063.1	30 pcs	**94**
91.232.2063.2	30 pcs	**94**
91.232.2064.1	30 pcs	**95**
91.232.2064.2	30 pcs	**95**
91.232.2069.1	40 pcs	**96**
91.232.2069.2	25 pcs	**96**
91.232.2070.1	30 pcs	**93**
91.232.2070.2	30 pcs	**93**
91.232.2073.1	30 pcs	**94**
91.232.2073.2	30 pcs	**94**
91.232.2074.1	30 pcs	**95**
91.232.2074.2	30 pcs	**95**
91.232.3000.1	25 pcs	**93**
91.232.3000.2	25 pcs	**93**
91.232.3000.4	25 pcs	**93**
91.232.3003.1	25 pcs	**94**
91.232.3003.2	25 pcs	**94**

INDEX

PART NUMBER | PU | PAGE

91.232.3003.4	25 pcs	**94**
91.232.3004.1	25 pcs	**95**
91.232.3004.2	25 pcs	**95**
91.232.3004.4	25 pcs	**95**
91.232.3009.1	25 pcs	**96**
91.232.3009.2	25 pcs	**96**
91.232.3050.1	25 pcs	**93**
91.232.3050.2	25 pcs	**93**
91.232.3053.1	25 pcs	**94**
91.232.3053.2	25 pcs	**94**
91.232.3054.1	25 pcs	**95**
91.232.3054.2	25 pcs	**95**
91.232.3060.1	25 pcs	**93**
91.232.3060.2	25 pcs	**93**
91.232.3063.2	25 pcs	**94**
91.232.3064.1	25 pcs	**95**
91.232.3064.2	25 pcs	**95**
91.232.3069.2	25 pcs	**96**
91.232.3070.1	25 pcs	**93**
91.232.3070.2	25 pcs	**93**
91.232.3073.1	25 pcs	**94**
91.232.3073.2	25 pcs	**94**
91.232.3074.1	25 pcs	**95**
91.232.3074.2	25 pcs	**95**
91.232.4000.1	20 pcs	**93**
91.232.4000.2	20 pcs	**93**
91.232.4000.4	20 pcs	**93**
91.232.4003.1	20 pcs	**94**
91.232.4003.2	20 pcs	**94**
91.232.4003.4	20 pcs	**94**
91.232.4004.1	20 pcs	**95**
91.232.4004.2	25 pcs	**95**
91.232.4004.4	20 pcs	**95**
91.232.4009.1	20 pcs	**96**
91.232.4009.2	25 pcs	**96**
91.232.4050.1	20 pcs	**93**
91.232.4050.2	20 pcs	**93**
91.232.4053.1	20 pcs	**94**
91.232.4053.2	20 pcs	**94**
91.232.4054.1	20 pcs	**95**
91.232.4054.2	20 pcs	**95**
91.232.4060.2	25 pcs	**93**
91.232.4063.2	20 pcs	**94**
91.232.4064.2	25 pcs	**95**
91.232.4069.2	20 pcs	**96**
91.232.4070.1	20 pcs	**93**
91.232.4070.2	20 pcs	**93**
91.232.4073.1	20 pcs	**94**
91.232.4073.2	20 pcs	**94**
91.232.4074.1	20 pcs	**95**
91.232.4074.2	20 pcs	**95**
91.232.5000.1	15 pcs	**93**
91.232.5000.2	15 pcs	**93**
91.232.5000.4	15 pcs	**93**
91.232.5003.1	15 pcs	**94**
91.232.5003.2	15 pcs	**94**
91.232.5003.4	15 pcs	**94**
91.232.5004.1	15 pcs	**95**
91.232.5004.2	15 pcs	**95**
91.232.5004.4	15 pcs	**95**
91.232.5009.1	15 pcs	**96**
91.232.5009.2	20 pcs	**96**
91.232.5050.1	15 pcs	**93**
91.232.5050.2	15 pcs	**93**
91.232.5053.1	15 pcs	**94**
91.232.5053.2	15 pcs	**94**
91.232.5054.1	15 pcs	**95**
91.232.5054.2	15 pcs	**95**
91.232.5060.1	15 pcs	**93**
91.232.5060.2	15 pcs	**93**
91.232.5063.1	15 pcs	**94**
91.232.5063.2	20 pcs	**94**
91.232.5064.1	15 pcs	**95**
91.232.5064.2	20 pcs	**95**
91.232.5069.2	15 pcs	**96**
91.232.5070.1	15 pcs	**93**
91.232.5070.2	15 pcs	**93**
91.232.5073.1	15 pcs	**94**
91.232.5073.2	15 pcs	**94**
91.232.5074.1	15 pcs	**95**
91.232.5074.2	15 pcs	**95**
91.232.6000.1	15 pcs	**93**
91.232.6000.2	15 pcs	**93**
91.232.6000.4	15 pcs	**93**
91.232.6003.1	15 pcs	**94**
91.232.6003.2	15 pcs	**94**
91.232.6003.4	15 pcs	**94**
91.232.6004.1	15 pcs	**95**
91.232.6004.2	10 pcs	**95**
91.232.6004.4	15 pcs	**95**
91.232.6009.1	10 pcs	**96**
91.232.6009.2	15 pcs	**96**
91.232.6050.1	15 pcs	**93**
91.232.6050.2	15 pcs	**93**
91.232.6053.1	15 pcs	**94**
91.232.6053.2	15 pcs	**94**
91.232.6054.2	15 pcs	**95**
91.232.6060.1	15 pcs	**93**
91.232.6060.2	15 pcs	**93**
91.232.6063.2	10 pcs	**94**
91.232.6064.2	15 pcs	**95**
91.232.6069.2	15 pcs	**96**
91.232.6070.1	15 pcs	**93**
91.232.6070.2	15 pcs	**93**
91.232.6073.1	15 pcs	**94**
91.232.6073.2	15 pcs	**94**
91.232.6074.2	15 pcs	**95**
91.232.7000.1	10 pcs	**93**
91.232.7000.2	10 pcs	**93**
91.232.7000.4	10 pcs	**93**
91.232.7003.1	10 pcs	**94**
91.232.7003.2	10 pcs	**94**
91.232.7003.4	10 pcs	**94**
91.232.7004.1	10 pcs	**95**
91.232.7004.2	10 pcs	**95**
91.232.7004.4	10 pcs	**95**
91.232.7009.1	10 pcs	**96**
91.232.7009.2	10 pcs	**96**
91.232.7050.1	10 pcs	**93**
91.232.7050.2	10 pcs	**93**
91.232.7053.1	10 pcs	**94**
91.232.7053.2	10 pcs	**94**
91.232.7054.1	10 pcs	**95**
91.232.7054.2	10 pcs	**95**
91.232.7060.2	10 pcs	**93**
91.232.7063.2	10 pcs	**94**
91.232.7064.2	10 pcs	**95**
91.232.7069.2	10 pcs	**96**
91.232.7070.1	10 pcs	**93**
91.232.7070.2	10 pcs	**93**
91.232.7073.1	10 pcs	**94**
91.232.7073.2	10 pcs	**94**
91.232.7074.1	10 pcs	**95**
91.232.7074.2	10 pcs	**95**
91.232.8000.1	10 pcs	**93**
91.232.8000.2	10 pcs	**93**
91.232.8000.4	10 pcs	**93**
91.232.8003.1	10 pcs	**94**
91.232.8003.2	10 pcs	**94**
91.232.8003.4	10 pcs	**94**
91.232.8004.1	10 pcs	**95**
91.232.8004.2	10 pcs	**95**
91.232.8004.4	10 pcs	**95**
91.232.8009.2	10 pcs	**96**
91.232.8050.1	10 pcs	**93**
91.232.8050.2	10 pcs	**93**
91.232.8053.1	10 pcs	**94**
91.232.8053.2	10 pcs	**94**
91.232.8054.2	10 pcs	**95**
91.232.8060.1	10 pcs	**93**
91.232.8060.2	10 pcs	**93**
91.232.8063.2	10 pcs	**94**
91.232.8064.2	10 pcs	**95**
91.232.8069.2	10 pcs	**96**
91.232.8070.1	10 pcs	**93**
91.232.8070.2	10 pcs	**93**
91.232.8073.1	10 pcs	**94**
91.232.8073.2	10 pcs	**94**
91.232.8074.2	10 pcs	**95**
91.252.8050.2	5 pcs	**108**
91.252.8070.2	5 pcs	**108**
91.253.1060.2	30 pcs	**112**
91.253.1063.2	30 pcs	**112**
91.253.1064.2	30 pcs	**113**
91.253.2060.2	20 pcs	**112**
91.253.2063.2	15 pcs	**112**
91.253.2064.2	15 pcs	**113**
91.253.4060.2	8 pcs	**112**
91.253.4063.2	8 pcs	**112**
91.253.4064.2	8 pcs	**113**
91.253.6060.2	5 pcs	**112**
91.253.6063.2	5 pcs	**112**
91.253.6064.2	5 pcs	**113**
91.253.8060.2	4 pcs	**112**
91.253.8063.2	4 pcs	**112**
91.253.8064.2	4 pcs	**113**
91.257.1000.1	30 pcs	**108**
91.257.1000.2	30 pcs	**108**
91.257.1000.9	30 pcs	**108**
91.257.1003.1	30 pcs	**109**
91.257.1003.2	30 pcs	**109**
91.257.1003.9	30 pcs	**109**
91.257.1004.2	30 pcs	**110**
91.257.1004.9	30 pcs	**110**
91.257.1050.1	30 pcs	**108**
91.257.1050.2	30 pcs	**108**
91.257.1050.9	30 pcs	**108**
91.257.1053.1	30 pcs	**109**
91.257.1053.2	30 pcs	**109**
91.257.1053.9	30 pcs	**109**
91.257.1054.2	30 pcs	**110**
91.257.1054.9	30 pcs	**110**
91.257.1060.1	30 pcs	**108**
91.257.1060.2	30 pcs	**108**
91.257.1060.9	30 pcs	**108**
91.257.1063.1	30 pcs	**109**
91.257.1063.2	30 pcs	**109**
91.257.1063.9	30 pcs	**109**
91.257.1064.1	30 pcs	**110**
91.257.1064.2	30 pcs	**110**
91.257.1064.9	30 pcs	**110**
91.257.1070.1	30 pcs	**108**
91.257.1070.2	30 pcs	**108**
91.257.1070.9	30 pcs	**108**
91.257.1073.1	30 pcs	**109**
91.257.1073.2	30 pcs	**109**
91.257.1073.9	30 pcs	**109**
91.257.1074.2	30 pcs	**110**
91.257.1074.9	30 pcs	**110**
91.257.2000.1	20 pcs	**108**
91.257.2000.2	20 pcs	**108**
91.257.2000.9	20 pcs	**108**
91.257.2003.1	20 pcs	**109**
91.257.2003.2	20 pcs	**109**
91.257.2003.9	20 pcs	**109**
91.257.2004.1	20 pcs	**110**
91.257.2004.2	20 pcs	**110**
91.257.2004.9	20 pcs	**110**
91.257.2050.2	20 pcs	**108**
91.257.2050.9	20 pcs	**108**
91.257.2053.1	20 pcs	**109**
91.257.2053.2	20 pcs	**109**
91.257.2053.9	20 pcs	**109**
91.257.2054.1	20 pcs	**110**
91.257.2054.2	20 pcs	**110**
91.257.2054.9	20 pcs	**110**
91.257.2060.1	20 pcs	**108**
91.257.2060.2	20 pcs	**108**
91.257.2060.9	20 pcs	**108**
91.257.2063.1	20 pcs	**109**
91.257.2063.2	20 pcs	**109**
91.257.2063.9	30 pcs	**109**
91.257.2064.1	20 pcs	**110**
91.257.2064.2	20 pcs	**110**
91.257.2064.9	20 pcs	**110**
91.257.2070.2	20 pcs	**108**
91.257.2070.9	20 pcs	**108**
91.257.2073.1	20 pcs	**109**
91.257.2073.2	20 pcs	**109**
91.257.2073.9	20 pcs	**109**
91.257.2074.1	20 pcs	**110**
91.257.2074.2	20 pcs	**110**
91.257.2074.9	20 pcs	**110**
91.257.3000.1	15 pcs	**108**
91.257.3000.2	15 pcs	**108**
91.257.3000.9	15 pcs	**108**
91.257.3003.1	15 pcs	**109**
91.257.3003.2	15 pcs	**109**
91.257.3003.9	15 pcs	**109**
91.257.3004.1	15 pcs	**110**
91.257.3004.2	15 pcs	**110**
91.257.3004.9	15 pcs	**110**
91.257.3050.1	15 pcs	**108**
91.257.3050.2	15 pcs	**108**
91.257.3050.9	15 pcs	**108**
91.257.3053.1	15 pcs	**109**
91.257.3053.2	15 pcs	**109**
91.257.3053.9	15 pcs	**109**
91.257.3054.1	15 pcs	**110**
91.257.3054.2	15 pcs	**110**
91.257.3054.9	15 pcs	**110**
91.257.3060.1	15 pcs	**108**
91.257.3060.2	15 pcs	**108**
91.257.3060.9	15 pcs	**108**
91.257.3063.2	15 pcs	**109**
91.257.3063.9	15 pcs	**109**
91.257.3064.1	15 pcs	**110**
91.257.3064.9	15 pcs	**110**
91.257.3070.1	15 pcs	**108**
91.257.3070.2	15 pcs	**108**
91.257.3070.9	15 pcs	**108**
91.257.3073.1	15 pcs	**109**
91.257.3073.2	15 pcs	**109**
91.257.3073.9	15 pcs	**109**
91.257.3074.1	15 pcs	**110**
91.257.3074.2	15 pcs	**110**
91.257.3074.9	15 pcs	**110**
91.257.4000.1	10 pcs	**108**
91.257.4000.2	10 pcs	**108**
91.257.4000.9	10 pcs	**108**

INDEX

PART NUMBER | PU | PAGE

91.257.4003.1	10 pcs	**109**
91.257.4003.9	10 pcs	**109**
91.257.4004.1	10 pcs	**110**
91.257.4004.9	10 pcs	**110**
91.257.4050.1	10 pcs	**108**
91.257.4050.2	10 pcs	**108**
91.257.4050.9	10 pcs	**108**
91.257.4053.9	10 pcs	**109**
91.257.4054.9	10 pcs	**110**
91.257.4060.2	10 pcs	**108**
91.257.4060.9	10 pcs	**108**
91.257.4070.1	10 pcs	**108**
91.257.4070.2	10 pcs	**108**
91.257.4070.9	10 pcs	**108**
91.257.4073.9	10 pcs	**109**
91.257.4074.9	10 pcs	**110**
91.257.5000.2	10 pcs	**108**
91.257.5000.9	10 pcs	**108**
91.257.5003.2	10 pcs	**109**
91.257.5003.9	10 pcs	**109**
91.257.5004.2	10 pcs	**110**
91.257.5004.9	10 pcs	**110**
91.257.5050.2	10 pcs	**108**
91.257.5050.9	10 pcs	**108**
91.257.5053.2	10 pcs	**109**
91.257.5053.9	10 pcs	**109**
91.257.5054.2	10 pcs	**110**
91.257.5054.9	10 pcs	**110**
91.257.5060.9	10 pcs	**108**
91.257.5063.9	10 pcs	**109**
91.257.5070.2	10 pcs	**108**
91.257.5070.9	10 pcs	**108**
91.257.5073.2	10 pcs	**109**
91.257.5073.9	10 pcs	**109**
91.257.5074.2	10 pcs	**110**
91.257.5074.9	10 pcs	**110**
91.257.6000.9	8 pcs	**108**
91.257.6003.1	8 pcs	**109**
91.257.6003.2	8 pcs	**109**
91.257.6003.9	8 pcs	**109**
91.257.6004.1	8 pcs	**110**
91.257.6004.2	8 pcs	**110**
91.257.6004.9	8 pcs	**110**
91.257.6050.9	8 pcs	**108**
91.257.6053.1	8 pcs	**109**
91.257.6053.2	8 pcs	**109**
91.257.6053.9	8 pcs	**109**
91.257.6054.1	8 pcs	**110**
91.257.6054.2	8 pcs	**110**
91.257.6054.9	8 pcs	**110**
91.257.6064.2	8 pcs	**110**
91.257.6070.9	8 pcs	**108**
91.257.6073.1	8 pcs	**109**
91.257.6073.2	8 pcs	**109**
91.257.6073.9	8 pcs	**109**
91.257.6074.1	8 pcs	**110**
91.257.6074.2	8 pcs	**110**
91.257.6074.9	8 pcs	**110**
91.257.7000.9	5 pcs	**108**
91.257.7003.9	5 pcs	**109**
91.257.7004.9	5 pcs	**110**
91.257.7050.9	5 pcs	**108**
91.257.7053.9	5 pcs	**109**
91.257.7054.9	5 pcs	**110**
91.257.7070.9	5 pcs	**108**
91.257.7073.9	5 pcs	**109**
91.257.7074.9	5 pcs	**110**
91.257.8000.9	5 pcs	**108**
91.257.8003.9	5 pcs	**109**
91.257.8004.9	5 pcs	**110**
91.257.8050.9	5 pcs	**108**
91.257.8053.9	5 pcs	**109**
91.257.8054.9	5 pcs	**110**
91.257.8064.2	5 pcs	**110**
91.257.8070.9	5 pcs	**108**
91.257.8073.9	5 pcs	**109**
91.257.8074.9	5 pcs	**110**
91.921.2053.0	100 pcs	**80**
91.921.2053.1	100 pcs	**80**
91.921.2353.0	100 pcs	**80**
91.921.2453.0	100 pcs	**80**
91.921.3053.0	100 pcs	**80**
91.921.3053.1	100 pcs	**80**
91.921.3353.0	100 pcs	**80**
91.921.3453.0	100 pcs	**80**
91.921.3553.0	100 pcs	**80**
91.921.9053.0	100 pcs	**81**
91.921.9053.1	100 pcs	**81**
91.921.9353.0	100 pcs	**81**
91.921.9453.0	100 pcs	**81**
91.921.9553.0	100 pcs	**81**
91.922.2053.0	100 pcs	**80**
91.922.2053.1	100 pcs	**80**
91.922.2353.0	100 pcs	**80**
91.922.2453.0	100 pcs	**80**
91.922.3053.0	100 pcs	**80**
91.922.3053.1	100 pcs	**80**
91.922.3353.0	100 pcs	**80**
91.922.3453.0	100 pcs	**80**
91.922.3553.0	100 pcs	**80**
91.922.9053.0	100 pcs	**81**
91.922.9053.1	100 pcs	**81**
91.922.9353.0	100 pcs	**81**
91.922.9453.0	100 pcs	**81**
91.922.9553.0	100 pcs	**81**
91.931.3053.0	100 pcs	**89**
91.931.3053.1	100 pcs	**89**
91.931.3057.0	100 pcs	**89**
91.931.3853.0	100 pcs	**89**
91.931.4053.0	100 pcs	**89**
91.931.4053.1	100 pcs	**89**
91.931.9053.0	100 pcs	**90**
91.931.9053.1	100 pcs	**90**
91.931.9057.0	100 pcs	**90**
91.931.9153.0	100 pcs	**90**
91.931.9153.1	100 pcs	**90**
91.931.9853.0	100 pcs	**90**
91.932.3053.0	100 pcs	**89**
91.932.3053.1	100 pcs	**89**
91.932.3057.0	100 pcs	**89**
91.932.3853.0	100 pcs	**89**
91.932.4053.0	100 pcs	**89**
91.932.4053.1	100 pcs	**89**
91.932.9053.0	100 pcs	**90**
91.932.9053.1	100 pcs	**90**
91.932.9153.0	100 pcs	**90**
91.932.9153.1	100 pcs	**90**
91.932.9853.0	100 pcs	**90**
91.941.3053.0	50 pcs	**97**
91.941.3053.1	50 pcs	**97**
91.941.4050.0	50 pcs	**97**
91.941.4050.1	50 pcs	**97**
91.941.4053.0	50 pcs	**97**
91.941.4053.1	50 pcs	**97**
91.941.4250.0	50 pcs	**97**
91.941.4650.0	50 pcs	**97**
91.941.9050.0	100 pcs	**98**
91.941.9050.1	100 pcs	**98**
91.941.9053.0	100 pcs	**98**
91.941.9053.1	100 pcs	**98**
91.941.9250.0	100 pcs	**98**
91.941.9650.0	100 pcs	**98**
91.942.3053.0	50 pcs	**97**
91.942.3053.1	50 pcs	**97**
91.942.4050.0	50 pcs	**97**
91.942.4050.1	50 pcs	**97**
91.942.4053.0	50 pcs	**97**
91.942.4053.1	50 pcs	**97**
91.942.4250.0	50 pcs	**97**
91.942.4650.0	50 pcs	**97**
91.942.9050.0	100 pcs	**98**
91.942.9050.1	100 pcs	**98**
91.942.9053.0	100 pcs	**98**
91.942.9053.1	100 pcs	**98**
91.942.9250.0	100 pcs	**98**
91.942.9650.0	100 pcs	**98**
91.951.3053.0	50 pcs	**104**
91.951.3053.1	50 pcs	**104**
91.951.3057.0	50 pcs	**104**
91.951.3253.0	50 pcs	**104**
91.951.3353.0	50 pcs	**104**
91.951.3453.0	50 pcs	**104**
91.951.3653.0	50 pcs	**104**
91.951.4053.0	50 pcs	**104**
91.951.4053.1	50 pcs	**104**
91.951.4253.0	50 pcs	**104**
91.951.4353.0	50 pcs	**104**
91.951.4453.0	50 pcs	**104**
91.951.4653.0	50 pcs	**104**
91.951.9053.0	100 pcs	**105**
91.951.9053.1	100 pcs	**105**
91.951.9253.0	100 pcs	**105**
91.951.9353.0	100 pcs	**105**
91.951.9453.0	100 pcs	**105**
91.951.9653.0	100 pcs	**105**
91.952.3053.0	50 pcs	**104**
91.952.3053.1	50 pcs	**104**
91.952.3253.0	50 pcs	**104**
91.952.3353.0	50 pcs	**104**
91.952.3453.0	50 pcs	**104**
91.952.3653.0	50 pcs	**104**
91.952.4053.0	50 pcs	**104**
91.952.4053.1	50 pcs	**104**
91.952.4253.0	50 pcs	**104**
91.952.4353.0	50 pcs	**104**
91.952.4453.0	50 pcs	**104**
91.952.4653.0	50 pcs	**104**
91.952.9053.0	100 pcs	**105**
91.952.9053.1	100 pcs	**105**
91.952.9253.0	100 pcs	**105**
91.952.9353.0	100 pcs	**105**
91.952.9453.0	100 pcs	**105**
91.952.9653.0	100 pcs	**105**
92.002.5053.0	1 pc	**76**
92.002.5153.1	1 pc	**76**
92.002.5253.1	1 pc	**76**
92.002.5353.0	1 pc	**76**
92.030.0053.1	20 pcs	**14**
92.030.0153.1	20 pcs	**14**
92.030.0253.1	20 pcs	**14**
92.030.0353.1	20 pcs	**14**
92.030.0953.0	90 pcs	**14**
92.030.0953.1	90 pcs	**14**
92.030.1253.0	100 pcs	**14**
92.030.1253.1	100 pcs	**14**
92.030.1353.0	100 pcs	**15**
92.030.2053.0	100 pcs	**16**
92.030.2153.0	100 pcs	**16**
92.030.2253.0	50 pcs	**16**
92.030.3053.0	100 pcs	**14**
92.030.3053.1	100 pcs	**14**
92.030.3153.0	100 pcs	**14**
92.030.3153.1	100 pcs	**14**
92.030.3553.0	100 pcs	**14**
92.030.3553.5	100 pcs	**14**
92.030.3653.0	100 pcs	**14**
92.030.3653.5	100 pcs	**14**
92.030.5853.0	100 pcs	**15**
92.030.5958.0	100 pcs	**16**
92.030.5958.1	100 pcs	**16**
92.030.6053.0	100 pcs	**14**
92.030.6053.1	100 pcs	**14**
92.030.6953.0	20 pcs	**14**
92.030.6953.1	20 pcs	**14**
92.030.7053.0	20 pcs	**14**
92.030.7053.5	20 pcs	**14**
92.030.7153.0	20 pcs	**14**
92.030.7253.0	20 pcs	**14**
92.030.7553.0	20 pcs	**14**
92.031.0058.0	100 pcs	**13**
92.031.0058.1	100 pcs	**13**
92.031.0158.0	100 pcs	**13**
92.031.0158.5	100 pcs	**13**
92.031.0458.0	100 pcs	**13**
92.031.0658.0	100 pcs	**13**
92.031.0758.0	100 pcs	**13**
92.031.3257.0	200 pcs	**11**
92.031.3258.0	200 pcs	**11**
92.031.3258.1	200 pcs	**11**
92.031.3458.0	200 pcs	**11**
92.031.3458.5	200 pcs	**11**
92.031.3558.0	200 pcs	**11**
92.031.3658.0	200 pcs	**11**
92.031.3757.0	200 pcs	**11**
92.031.3758.0	200 pcs	**11**
92.031.3858.0	200 pcs	**11**
92.031.3958.0	200 pcs	**11**
92.031.4453.0	200 pcs	**11**
92.031.4453.1	200 pcs	**11**
92.031.4853.0	200 pcs	**11**
92.031.4953.0	200 pcs	**11**
92.031.5453.1	5 pcs	**148**
92.031.7657.1	100 pcs	**12**
92.031.7658.0	100 pcs	**12**
92.031.7658.1	100 pcs	**12**
92.031.7758.0	100 pcs	**12**
92.031.8058.0	100 pcs	**12**
92.031.8258.0	100 pcs	**12**
92.031.8458.0	100 pcs	**12**
92.031.8558.0	100 pcs	**12**
92.031.8758.0	100 pcs	**11**
92.031.8758.1	100 pcs	**11**
92.031.9658.0	100 pcs	**12**
92.031.9658.1	100 pcs	**12**
92.031.9758.0	100 pcs	**12**
92.031.9758.5	100 pcs	**12**
92.032.0058.0	100 pcs	**13**
92.032.0058.1	100 pcs	**13**
92.032.0158.0	100 pcs	**13**
92.032.0158.5	100 pcs	**13**
92.032.0458.0	100 pcs	**13**
92.032.0658.0	100 pcs	**13**
92.032.3357.0	200 pcs	**11**
92.032.3358.0	200 pcs	**11**
92.032.3358.1	200 pcs	**11**
92.032.3458.0	200 pcs	**11**
92.032.3458.5	200 pcs	**11**
92.032.3558.0	200 pcs	**11**
92.032.3658.0	200 pcs	**11**
92.032.3757.0	200 pcs	**11**

INDEX

PART NUMBER | PU | PAGE

92.032.3758.0	200 pcs	**11**
92.032.3858.0	200 pcs	**11**
92.032.3958.0	200 pcs	**11**
92.032.7657.1	100 pcs	**12**
92.032.7658.0	100 pcs	**12**
92.032.7658.1	100 pcs	**12**
92.032.7758.0	100 pcs	**12**
92.032.8058.0	100 pcs	**12**
92.032.8258.0	100 pcs	**12**
92.032.8458.0	100 pcs	**12**
92.032.8558.0	100 pcs	**12**
92.032.8758.0	100 pcs	**11**
92.032.8758.1	100 pcs	**11**
92.032.9658.0	100 pcs	**12**
92.032.9658.1	100 pcs	**12**
92.032.9758.0	100 pcs	**12**
92.032.9758.5	100 pcs	**12**
92.033.0057.0	100 pcs	**13**
92.033.0058.0	100 pcs	**13**
92.033.0058.1	100 pcs	**13**
92.033.0158.0	100 pcs	**13**
92.033.0158.5	100 pcs	**13**
92.033.0458.0	100 pcs	**13**
92.033.0658.0	100 pcs	**13**
92.033.0758.0	100 pcs	**13**
92.034.0057.0	100 pcs	**13**
92.034.0058.0	100 pcs	**13**
92.034.0058.1	100 pcs	**13**
92.034.0158.0	100 pcs	**13**
92.034.0158.5	100 pcs	**13**
92.034.0458.0	100 pcs	**13**
92.034.0658.0	100 pcs	**13**
92.040.1053.0	100 pcs	**37**
92.040.1053.1	100 pcs	**37**
92.040.1153.0	100 pcs	**37**
92.040.1153.5	100 pcs	**37**
92.040.6953.0	20 pcs	**37**
92.040.6953.1	20 pcs	**37**
92.040.7053.0	20 pcs	**37**
92.040.7053.5	20 pcs	**37**
92.040.7153.0	20 pcs	**37**
92.040.7253.0	20 pcs	**37**
92.041.0058.0	100 pcs	**36**
92.041.0058.1	100 pcs	**36**
92.041.0158.0	100 pcs	**36**
92.041.3253.0	100 pcs	**36**
92.041.3253.1	100 pcs	**36**
92.041.3453.0	100 pcs	**36**
92.041.3453.5	100 pcs	**36**
92.041.3553.0	100 pcs	**36**
92.041.3953.0	100 pcs	**36**
92.041.8058.0	100 pcs	**36**
92.041.8258.0	100 pcs	**36**
92.041.9658.0	100 pcs	**36**
92.041.9658.1	100 pcs	**36**
92.041.9758.0	100 pcs	**36**
92.041.9758.5	100 pcs	**36**
92.042.0058.0	100 pcs	**36**
92.042.0058.1	100 pcs	**36**
92.042.0158.0	100 pcs	**36**
92.042.3353.0	100 pcs	**36**
92.042.3353.1	100 pcs	**36**
92.042.3453.0	100 pcs	**36**
92.042.3453.5	100 pcs	**36**
92.042.3553.0	100 pcs	**36**
92.042.3953.0	100 pcs	**36**
92.042.8058.0	100 pcs	**36**
92.042.8258.0	100 pcs	**36**
92.042.9658.0	100 pcs	**36**
92.042.9658.1	100 pcs	**36**
92.042.9758.0	100 pcs	**36**
92.042.9758.5	100 pcs	**36**
92.043.0058.0	100 pcs	**36**
92.043.0058.1	100 pcs	**36**
92.043.0158.0	100 pcs	**36**
92.043.0158.5	100 pcs	**36**
92.044.0058.0	100 pcs	**36**
92.044.0058.1	100 pcs	**36**
92.044.0158.0	100 pcs	**36**
92.044.0158.5	100 pcs	**36**
92.050.0153.0	100 pcs	**51**
92.050.0153.1	100 pcs	**51**
92.050.1553.1	5 pcs	**148**
92.050.1653.0	5 pcs	**148**
92.050.2153.0	100 pcs	**51**
92.050.2153.5	100 pcs	**51**
92.050.2453.0	50 pcs	**52**
92.050.3053.0	100 pcs	**51**
92.050.3053.1	100 pcs	**51**
92.050.3153.0	100 pcs	**51**
92.050.3153.1	100 pcs	**51**
92.050.3253.0	100 pcs	**51**
92.050.3253.1	100 pcs	**51**
92.050.3353.0	100 pcs	**51**
92.050.3353.1	100 pcs	**51**
92.050.3453.0	100 pcs	**51**
92.050.3553.0	100 pcs	**51**
92.050.3553.5	100 pcs	**51**
92.050.3653.0	100 pcs	**51**
92.050.3653.5	100 pcs	**51**
92.050.3753.0	100 pcs	**51**
92.050.3753.5	100 pcs	**51**
92.050.3853.0	100 pcs	**51**
92.050.3853.5	100 pcs	**51**
92.050.6953.0	20 pcs	**51**
92.050.6953.1	20 pcs	**51**
92.050.7053.0	20 pcs	**51**
92.050.7053.5	20 pcs	**51**
92.050.7153.0	20 pcs	**51**
92.050.7253.0	20 pcs	**51**
92.050.7353.0	20 pcs	**51**
92.050.7453.0	20 pcs	**51**
92.050.8853.0	3 pcs	**150**
92.050.9053.0	1 pc	**150**
92.050.9153.0	5 pcs	**150**
92.051.0058.0	100 pcs	**50**
92.051.0058.1	100 pcs	**50**
92.051.0258.0	100 pcs	**50**
92.051.0458.0	100 pcs	**50**
92.051.3153.0	100 pcs	**49**
92.051.3253.0	100 pcs	**49**
92.051.3253.1	100 pcs	**49**
92.051.3257.0	100 pcs	**49**
92.051.3453.0	100 pcs	**49**
92.051.3453.5	100 pcs	**49**
92.051.3553.0	100 pcs	**49**
92.051.3753.0	100 pcs	**49**
92.051.3953.0	100 pcs	**49**
92.051.5453.1	5 pcs	**148**
92.051.5553.0	5 pcs	**148**
92.051.5653.0	5 pcs	**149**
92.051.8058.0	100 pcs	**49**
92.051.8258.0	100 pcs	**49**
92.051.8358.0	100 pcs	**49**
92.051.8658.0	100 pcs	**49**
92.051.9658.0	100 pcs	**49**
92.051.9658.1	100 pcs	**49**
92.051.9758.0	100 pcs	**49**
92.051.9758.5	100 pcs	**49**
92.052.0058.0	100 pcs	**50**
92.052.0058.1	100 pcs	**50**
92.052.0458.0	100 pcs	**50**
92.052.3153.0	100 pcs	**49**
92.052.3353.0	100 pcs	**49**
92.052.3353.1	100 pcs	**49**
92.052.3453.0	100 pcs	**49**
92.052.3453.5	100 pcs	**49**
92.052.3553.0	100 pcs	**49**
92.052.3753.0	100 pcs	**49**
92.052.3953.0	100 pcs	**49**
92.052.8058.0	100 pcs	**49**
92.052.8258.0	100 pcs	**49**
92.052.8358.0	100 pcs	**49**
92.052.8658.0	100 pcs	**49**
92.052.9658.0	100 pcs	**49**
92.052.9658.1	100 pcs	**49**
92.052.9758.0	100 pcs	**49**
92.052.9758.5	100 pcs	**49**
92.053.0058.0	100 pcs	**49**
92.053.0058.1	100 pcs	**49**
92.053.0258.0	100 pcs	**49**
92.053.0458.0	100 pcs	**49**
92.054.0058.0	100 pcs	**49**
92.054.0058.1	100 pcs	**49**
92.054.0458.0	100 pcs	**49**
92.060.3053.1	100 pcs	**70**
92.061.8658.1	100 pcs	**69**
92.062.8658.1	100 pcs	**69**
92.207.1000.0	50 pcs	**38**
92.207.1000.1	50 pcs	**38**
92.207.1000.2	50 pcs	**38**
92.207.1000.3	50 pcs	**38**
92.207.1000.7	50 pcs	**38**
92.207.1003.0	50 pcs	**40**
92.207.1003.1	50 pcs	**40**
92.207.1003.2	50 pcs	**40**
92.207.1003.3	50 pcs	**40**
92.207.1003.7	50 pcs	**40**
92.207.1004.0	50 pcs	**42**
92.207.1004.1	50 pcs	**42**
92.207.1004.2	50 pcs	**42**
92.207.1004.3	50 pcs	**42**
92.207.1004.7	50 pcs	**42**
92.207.1014.1	50 pcs	**42**
92.207.1050.0	50 pcs	**39**
92.207.1050.1	50 pcs	**39**
92.207.1050.2	50 pcs	**39**
92.207.1050.3	50 pcs	**39**
92.207.1050.7	50 pcs	**39**
92.207.1053.0	50 pcs	**41**
92.207.1053.1	50 pcs	**41**
92.207.1053.2	50 pcs	**41**
92.207.1053.3	50 pcs	**41**
92.207.1053.7	50 pcs	**41**
92.207.1054.0	50 pcs	**43**
92.207.1054.1	50 pcs	**43**
92.207.1054.2	50 pcs	**43**
92.207.1054.3	50 pcs	**43**
92.207.1054.7	50 pcs	**43**
92.207.1060.0	50 pcs	**39**
92.207.1060.1	50 pcs	**39**
92.207.1060.2	50 pcs	**39**
92.207.1060.7	50 pcs	**39**
92.207.1063.0	50 pcs	**41**
92.207.1063.1	50 pcs	**41**
92.207.1063.2	50 pcs	**41**
92.207.1063.7	50 pcs	**41**
92.207.1064.0	50 pcs	**43**
92.207.1064.1	50 pcs	**43**
92.207.1064.2	50 pcs	**43**
92.207.1064.3	50 pcs	**43**
92.207.1064.7	50 pcs	**43**
92.207.1070.0	50 pcs	**38**
92.207.1070.1	50 pcs	**38**
92.207.1070.2	50 pcs	**38**
92.207.1070.3	50 pcs	**38**
92.207.1070.7	50 pcs	**38**
92.207.1073.0	50 pcs	**40**
92.207.1073.1	50 pcs	**40**
92.207.1073.2	50 pcs	**40**
92.207.1073.3	50 pcs	**40**
92.207.1073.7	50 pcs	**40**
92.207.1074.0	50 pcs	**42**
92.207.1074.1	50 pcs	**42**
92.207.1074.2	50 pcs	**42**
92.207.1074.3	50 pcs	**42**
92.207.1074.7	50 pcs	**42**
92.207.2000.0	25 pcs	**38**
92.207.2000.1	25 pcs	**38**
92.207.2000.2	25 pcs	**38**
92.207.2000.3	25 pcs	**38**
92.207.2000.7	25 pcs	**38**
92.207.2003.0	25 pcs	**40**
92.207.2003.1	25 pcs	**40**
92.207.2003.2	25 pcs	**40**
92.207.2003.3	25 pcs	**40**
92.207.2003.7	25 pcs	**40**
92.207.2004.0	25 pcs	**42**
92.207.2004.1	25 pcs	**42**
92.207.2004.2	25 pcs	**42**
92.207.2004.3	25 pcs	**42**
92.207.2004.7	25 pcs	**42**
92.207.2010.1	25 pcs	**38**
92.207.2013.1	25 pcs	**40**
92.207.2014.1	25 pcs	**42**
92.207.2050.0	25 pcs	**39**
92.207.2050.1	25 pcs	**39**
92.207.2050.2	25 pcs	**39**
92.207.2050.3	25 pcs	**39**
92.207.2050.7	25 pcs	**39**
92.207.2053.0	25 pcs	**41**
92.207.2053.1	25 pcs	**41**
92.207.2053.2	25 pcs	**41**
92.207.2053.3	25 pcs	**41**
92.207.2053.7	25 pcs	**41**
92.207.2054.0	25 pcs	**43**
92.207.2054.1	25 pcs	**43**
92.207.2054.2	25 pcs	**43**
92.207.2054.3	25 pcs	**43**
92.207.2054.7	25 pcs	**43**
92.207.2060.0	25 pcs	**39**
92.207.2060.1	25 pcs	**39**
92.207.2060.2	25 pcs	**39**
92.207.2060.3	25 pcs	**39**
92.207.2060.7	25 pcs	**39**
92.207.2063.0	25 pcs	**41**
92.207.2063.1	25 pcs	**41**
92.207.2063.2	25 pcs	**41**
92.207.2063.7	25 pcs	**41**
92.207.2064.0	25 pcs	**43**
92.207.2064.1	25 pcs	**43**
92.207.2064.2	25 pcs	**43**
92.207.2064.3	25 pcs	**43**
92.207.2064.7	25 pcs	**43**
92.207.2070.0	25 pcs	**38**
92.207.2070.1	25 pcs	**38**
92.207.2070.2	25 pcs	**38**
92.207.2070.3	25 pcs	**38**
92.207.2070.7	25 pcs	**38**
92.207.2073.0	25 pcs	**40**

INDEX

PART NUMBER | PU | PAGE

92.207.2073.1	25 pcs	**40**
92.207.2073.2	25 pcs	**40**
92.207.2073.3	25 pcs	**40**
92.207.2073.7	25 pcs	**40**
92.207.2074.0	25 pcs	**42**
92.207.2074.1	25 pcs	**42**
92.207.2074.2	25 pcs	**42**
92.207.2074.3	25 pcs	**42**
92.207.2074.7	25 pcs	**42**
92.207.3000.0	20 pcs	**38**
92.207.3000.1	20 pcs	**38**
92.207.3000.2	20 pcs	**38**
92.207.3000.3	20 pcs	**38**
92.207.3000.7	20 pcs	**38**
92.207.3003.0	20 pcs	**40**
92.207.3003.1	20 pcs	**40**
92.207.3003.2	20 pcs	**40**
92.207.3003.7	20 pcs	**40**
92.207.3004.0	20 pcs	**42**
92.207.3004.1	20 pcs	**42**
92.207.3004.2	20 pcs	**42**
92.207.3004.3	20 pcs	**42**
92.207.3004.7	20 pcs	**42**
92.207.3010.1	20 pcs	**38**
92.207.3014.1	20 pcs	**42**
92.207.3050.0	20 pcs	**39**
92.207.3050.1	20 pcs	**39**
92.207.3050.2	20 pcs	**39**
92.207.3050.3	20 pcs	**39**
92.207.3050.7	20 pcs	**39**
92.207.3053.0	20 pcs	**41**
92.207.3053.1	20 pcs	**41**
92.207.3053.2	20 pcs	**41**
92.207.3053.7	20 pcs	**41**
92.207.3054.0	20 pcs	**43**
92.207.3054.1	20 pcs	**43**
92.207.3054.2	20 pcs	**43**
92.207.3054.3	20 pcs	**43**
92.207.3054.7	20 pcs	**43**
92.207.3060.0	20 pcs	**39**
92.207.3060.1	20 pcs	**39**
92.207.3060.2	20 pcs	**39**
92.207.3060.3	20 pcs	**39**
92.207.3060.7	20 pcs	**39**
92.207.3063.0	20 pcs	**41**
92.207.3063.1	20 pcs	**41**
92.207.3063.2	20 pcs	**41**
92.207.3063.7	20 pcs	**41**
92.207.3064.0	20 pcs	**43**
92.207.3064.1	20 pcs	**43**
92.207.3064.2	20 pcs	**43**
92.207.3064.3	20 pcs	**43**
92.207.3064.7	20 pcs	**43**
92.207.3070.0	20 pcs	**38**
92.207.3070.1	20 pcs	**38**
92.207.3070.2	20 pcs	**38**
92.207.3070.3	20 pcs	**38**
92.207.3070.7	20 pcs	**38**
92.207.3073.0	20 pcs	**40**
92.207.3073.1	20 pcs	**40**
92.207.3073.2	20 pcs	**40**
92.207.3073.7	20 pcs	**40**
92.207.3074.0	20 pcs	**42**
92.207.3074.1	20 pcs	**42**
92.207.3074.2	20 pcs	**42**
92.207.3074.3	20 pcs	**42**
92.207.3074.7	20 pcs	**42**
92.207.4000.0	15 pcs	**38**
92.207.4000.1	15 pcs	**38**
92.207.4000.2	15 pcs	**38**
92.207.4000.3	15 pcs	**38**
92.207.4000.7	15 pcs	**38**
92.207.4003.0	15 pcs	**40**
92.207.4003.1	15 pcs	**40**
92.207.4003.2	15 pcs	**40**
92.207.4003.3	15 pcs	**40**
92.207.4003.7	15 pcs	**40**
92.207.4004.0	15 pcs	**42**
92.207.4004.1	15 pcs	**42**
92.207.4004.2	15 pcs	**42**
92.207.4004.3	15 pcs	**42**
92.207.4004.7	15 pcs	**42**
92.207.4010.1	15 pcs	**38**
92.207.4014.1	15 pcs	**42**
92.207.4050.0	15 pcs	**39**
92.207.4050.1	15 pcs	**39**
92.207.4050.2	15 pcs	**39**
92.207.4050.3	15 pcs	**39**
92.207.4050.7	15 pcs	**39**
92.207.4053.0	15 pcs	**41**
92.207.4053.1	15 pcs	**41**
92.207.4053.2	15 pcs	**41**
92.207.4053.3	15 pcs	**41**
92.207.4053.7	15 pcs	**41**
92.207.4054.0	15 pcs	**43**
92.207.4054.1	15 pcs	**43**
92.207.4054.2	15 pcs	**43**
92.207.4054.3	15 pcs	**43**
92.207.4054.7	15 pcs	**43**
92.207.4060.0	15 pcs	**39**
92.207.4060.1	15 pcs	**39**
92.207.4060.2	15 pcs	**39**
92.207.4060.3	15 pcs	**39**
92.207.4060.7	15 pcs	**39**
92.207.4063.0	15 pcs	**41**
92.207.4063.1	15 pcs	**41**
92.207.4063.2	15 pcs	**41**
92.207.4063.7	15 pcs	**41**
92.207.4064.0	15 pcs	**43**
92.207.4064.1	15 pcs	**43**
92.207.4064.2	15 pcs	**43**
92.207.4064.7	15 pcs	**43**
92.207.4070.0	15 pcs	**38**
92.207.4070.1	15 pcs	**38**
92.207.4070.2	15 pcs	**38**
92.207.4070.3	15 pcs	**38**
92.207.4070.7	15 pcs	**38**
92.207.4073.0	15 pcs	**40**
92.207.4073.1	15 pcs	**40**
92.207.4073.2	15 pcs	**40**
92.207.4073.3	15 pcs	**40**
92.207.4073.7	15 pcs	**40**
92.207.4074.0	15 pcs	**42**
92.207.4074.1	15 pcs	**42**
92.207.4074.2	15 pcs	**42**
92.207.4074.3	15 pcs	**42**
92.207.4074.7	15 pcs	**42**
92.207.5000.0	10 pcs	**38**
92.207.5000.1	10 pcs	**38**
92.207.5000.2	10 pcs	**38**
92.207.5000.3	10 pcs	**38**
92.207.5000.7	10 pcs	**38**
92.207.5003.0	10 pcs	**40**
92.207.5003.1	10 pcs	**40**
92.207.5003.2	10 pcs	**40**
92.207.5003.3	10 pcs	**40**
92.207.5003.7	10 pcs	**40**
92.207.5004.0	10 pcs	**42**
92.207.5004.1	10 pcs	**42**
92.207.5004.2	10 pcs	**42**
92.207.5004.3	10 pcs	**42**
92.207.5004.7	10 pcs	**42**
92.207.5010.1	10 pcs	**38**
92.207.5014.1	10 pcs	**42**
92.207.5050.0	10 pcs	**39**
92.207.5050.1	10 pcs	**39**
92.207.5050.2	10 pcs	**39**
92.207.5050.3	10 pcs	**39**
92.207.5050.7	10 pcs	**39**
92.207.5053.0	10 pcs	**41**
92.207.5053.1	10 pcs	**41**
92.207.5053.2	10 pcs	**41**
92.207.5053.7	10 pcs	**41**
92.207.5054.0	10 pcs	**43**
92.207.5054.1	10 pcs	**43**
92.207.5054.2	10 pcs	**43**
92.207.5054.3	10 pcs	**43**
92.207.5054.7	10 pcs	**43**
92.207.5060.0	10 pcs	**39**
92.207.5060.1	10 pcs	**39**
92.207.5060.2	10 pcs	**39**
92.207.5060.7	10 pcs	**39**
92.207.5063.0	10 pcs	**41**
92.207.5063.1	10 pcs	**41**
92.207.5063.2	10 pcs	**41**
92.207.5063.7	10 pcs	**41**
92.207.5064.0	10 pcs	**43**
92.207.5064.1	10 pcs	**43**
92.207.5064.2	10 pcs	**43**
92.207.5064.7	10 pcs	**43**
92.207.5070.0	10 pcs	**38**
92.207.5070.1	10 pcs	**38**
92.207.5070.2	10 pcs	**38**
92.207.5070.3	10 pcs	**38**
92.207.5070.7	10 pcs	**38**
92.207.5073.0	10 pcs	**40**
92.207.5073.1	10 pcs	**40**
92.207.5073.2	10 pcs	**40**
92.207.5073.7	10 pcs	**40**
92.207.5074.0	10 pcs	**42**
92.207.5074.1	10 pcs	**42**
92.207.5074.2	10 pcs	**42**
92.207.5074.3	10 pcs	**42**
92.207.5074.7	10 pcs	**42**
92.207.6000.0	10 pcs	**38**
92.207.6000.1	10 pcs	**38**
92.207.6000.2	10 pcs	**38**
92.207.6000.3	10 pcs	**38**
92.207.6000.7	10 pcs	**38**
92.207.6003.0	10 pcs	**40**
92.207.6003.1	10 pcs	**40**
92.207.6003.2	10 pcs	**40**
92.207.6003.7	10 pcs	**40**
92.207.6004.0	10 pcs	**42**
92.207.6004.1	10 pcs	**42**
92.207.6004.2	10 pcs	**42**
92.207.6004.3	10 pcs	**42**
92.207.6004.7	10 pcs	**42**
92.207.6050.0	10 pcs	**39**
92.207.6050.1	10 pcs	**39**
92.207.6050.2	10 pcs	**39**
92.207.6050.3	10 pcs	**39**
92.207.6050.7	10 pcs	**39**
92.207.6053.0	10 pcs	**41**
92.207.6053.1	10 pcs	**41**
92.207.6053.2	10 pcs	**41**
92.207.6053.7	10 pcs	**41**
92.207.6054.0	10 pcs	**43**
92.207.6054.1	10 pcs	**43**
92.207.6054.2	10 pcs	**43**
92.207.6054.3	10 pcs	**43**
92.207.6054.7	10 pcs	**43**
92.207.6060.0	10 pcs	**39**
92.207.6060.1	10 pcs	**39**
92.207.6060.2	10 pcs	**39**
92.207.6060.3	10 pcs	**39**
92.207.6060.7	10 pcs	**39**
92.207.6063.0	10 pcs	**41**
92.207.6063.1	10 pcs	**41**
92.207.6063.2	10 pcs	**41**
92.207.6063.7	10 pcs	**41**
92.207.6064.0	10 pcs	**43**
92.207.6064.1	10 pcs	**43**
92.207.6064.2	10 pcs	**43**
92.207.6064.7	10 pcs	**43**
92.207.6070.0	10 pcs	**38**
92.207.6070.1	10 pcs	**38**
92.207.6070.2	10 pcs	**38**
92.207.6070.3	10 pcs	**38**
92.207.6070.7	10 pcs	**38**
92.207.6073.0	10 pcs	**40**
92.207.6073.1	10 pcs	**40**
92.207.6073.2	10 pcs	**40**
92.207.6073.7	10 pcs	**40**
92.207.6074.0	10 pcs	**42**
92.207.6074.1	10 pcs	**42**
92.207.6074.2	10 pcs	**42**
92.207.6074.3	10 pcs	**42**
92.207.6074.7	10 pcs	**42**
92.207.7000.0	5 pcs	**38**
92.207.7000.1	5 pcs	**38**
92.207.7000.2	5 pcs	**38**
92.207.7000.3	5 pcs	**38**
92.207.7000.7	5 pcs	**38**
92.207.7003.0	5 pcs	**40**
92.207.7003.1	5 pcs	**40**
92.207.7003.2	5 pcs	**40**
92.207.7003.7	5 pcs	**40**
92.207.7004.0	5 pcs	**42**
92.207.7004.1	5 pcs	**42**
92.207.7004.2	5 pcs	**42**
92.207.7004.3	5 pcs	**42**
92.207.7004.7	5 pcs	**42**
92.207.7050.0	5 pcs	**39**
92.207.7050.1	5 pcs	**39**
92.207.7050.2	5 pcs	**39**
92.207.7050.3	5 pcs	**39**
92.207.7050.7	5 pcs	**39**
92.207.7053.0	5 pcs	**41**
92.207.7053.1	5 pcs	**41**
92.207.7053.7	5 pcs	**41**
92.207.7054.0	5 pcs	**43**
92.207.7054.1	5 pcs	**43**
92.207.7054.3	5 pcs	**43**
92.207.7054.7	5 pcs	**43**
92.207.7060.0	5 pcs	**39**
92.207.7060.1	5 pcs	**39**
92.207.7060.2	5 pcs	**39**
92.207.7060.7	5 pcs	**39**
92.207.7063.0	5 pcs	**41**
92.207.7063.1	5 pcs	**41**
92.207.7063.7	5 pcs	**41**
92.207.7064.0	5 pcs	**43**
92.207.7064.1	5 pcs	**43**
92.207.7064.2	5 pcs	**43**
92.207.7064.7	5 pcs	**43**
92.207.7070.0	5 pcs	**38**
92.207.7070.1	5 pcs	**38**
92.207.7070.2	5 pcs	**38**
92.207.7070.3	5 pcs	**38**

INDEX

PART NUMBER | PU | PAGE

92.207.7070.7	5 pcs	38
92.207.7073.0	5 pcs	40
92.207.7073.1	5 pcs	40
92.207.7073.7	5 pcs	40
92.207.7074.0	5 pcs	42
92.207.7074.1	5 pcs	42
92.207.7074.3	5 pcs	42
92.207.7074.7	5 pcs	42
92.207.8000.0	5 pcs	38
92.207.8000.1	5 pcs	38
92.207.8000.2	5 pcs	38
92.207.8000.3	5 pcs	38
92.207.8000.7	5 pcs	38
92.207.8003.0	5 pcs	40
92.207.8003.1	5 pcs	40
92.207.8003.2	5 pcs	40
92.207.8003.7	5 pcs	40
92.207.8004.0	5 pcs	42
92.207.8004.1	5 pcs	42
92.207.8004.2	5 pcs	42
92.207.8004.3	5 pcs	42
92.207.8004.7	5 pcs	42
92.207.8050.0	5 pcs	39
92.207.8050.1	5 pcs	39
92.207.8050.2	5 pcs	39
92.207.8050.3	5 pcs	39
92.207.8050.7	5 pcs	39
92.207.8053.0	5 pcs	41
92.207.8053.1	5 pcs	41
92.207.8053.7	5 pcs	41
92.207.8054.0	5 pcs	43
92.207.8054.1	5 pcs	43
92.207.8054.2	5 pcs	43
92.207.8054.3	5 pcs	43
92.207.8054.7	5 pcs	43
92.207.8060.0	5 pcs	39
92.207.8060.1	5 pcs	39
92.207.8060.2	5 pcs	39
92.207.8060.3	5 pcs	39
92.207.8060.7	5 pcs	39
92.207.8063.0	5 pcs	41
92.207.8063.1	5 pcs	41
92.207.8063.7	5 pcs	41
92.207.8064.0	5 pcs	43
92.207.8064.1	5 pcs	43
92.207.8064.2	5 pcs	43
92.207.8064.3	5 pcs	43
92.207.8064.7	5 pcs	43
92.207.8070.0	5 pcs	38
92.207.8070.1	5 pcs	38
92.207.8070.2	5 pcs	38
92.207.8070.3	5 pcs	38
92.207.8070.7	5 pcs	38
92.207.8073.0	5 pcs	40
92.207.8073.1	5 pcs	40
92.207.8073.7	5 pcs	40
92.207.8074.0	5 pcs	42
92.207.8074.1	5 pcs	42
92.207.8074.2	5 pcs	42
92.207.8074.3	5 pcs	42
92.207.8074.7	5 pcs	42
92.208.1000.1	40 pcs	44
92.208.1000.2	40 pcs	44
92.208.1003.2	40 pcs	45
92.208.1004.1	40 pcs	45
92.208.1004.2	40 pcs	45
92.208.1050.1	40 pcs	44
92.208.1054.1	40 pcs	45
92.208.1060.1	40 pcs	44
92.208.1064.1	40 pcs	46
92.208.1070.1	40 pcs	44
92.208.1074.1	40 pcs	45
92.208.2000.1	20 pcs	44
92.208.2000.2	20 pcs	44
92.208.2003.1	20 pcs	45
92.208.2003.2	20 pcs	45
92.208.2004.1	20 pcs	45
92.208.2004.2	20 pcs	45
92.208.2050.1	20 pcs	44
92.208.2054.1	20 pcs	45
92.208.2060.1	20 pcs	44
92.208.2064.1	20 pcs	46
92.208.2070.1	20 pcs	44
92.208.2074.1	20 pcs	45
92.208.3000.1	15 pcs	44
92.208.3003.1	15 pcs	45
92.208.3003.2	15 pcs	45
92.208.3004.2	15 pcs	45
92.208.3050.1	15 pcs	44
92.208.3054.1	15 pcs	45
92.208.3060.1	15 pcs	44
92.208.3064.1	15 pcs	46
92.208.3070.1	15 pcs	44
92.208.3074.1	15 pcs	45
92.208.4000.1	10 pcs	44
92.208.4000.2	10 pcs	44
92.208.4003.2	10 pcs	45
92.208.4004.1	10 pcs	45
92.208.4004.2	10 pcs	45
92.208.4050.1	10 pcs	44
92.208.4054.1	10 pcs	45
92.208.4060.1	10 pcs	44
92.208.4060.2	10 pcs	44
92.208.4064.1	10 pcs	46
92.208.4070.1	10 pcs	44
92.208.4074.1	10 pcs	45
92.208.5000.1	10 pcs	44
92.208.5000.2	10 pcs	44
92.208.5003.2	10 pcs	45
92.208.5004.1	10 pcs	45
92.208.5004.2	10 pcs	45
92.208.5050.1	10 pcs	44
92.208.5054.1	10 pcs	45
92.208.5060.1	10 pcs	44
92.208.5064.1	10 pcs	46
92.208.5070.1	10 pcs	44
92.208.5074.1	10 pcs	45
92.208.6000.1	8 pcs	44
92.208.6000.2	8 pcs	44
92.208.6003.2	8 pcs	45
92.208.6004.2	8 pcs	45
92.208.6050.1	8 pcs	44
92.208.6060.1	8 pcs	44
92.208.6063.2	5 pcs	45
92.208.6064.2	10 pcs	46
92.208.6070.1	8 pcs	44
92.208.7000.1	5 pcs	44
92.208.7000.2	5 pcs	44
92.208.7003.2	8 pcs	45
92.208.7004.1	5 pcs	45
92.208.7004.2	8 pcs	45
92.208.7050.1	5 pcs	44
92.208.7060.1	5 pcs	44
92.208.7064.2	5 pcs	46
92.208.7070.1	5 pcs	44
92.208.8000.1	5 pcs	44
92.208.8000.2	5 pcs	44
92.208.8003.2	5 pcs	45
92.208.8004.1	5 pcs	45
92.208.8004.2	5 pcs	45
92.208.8050.1	5 pcs	44
92.208.8060.1	5 pcs	44
92.208.8070.1	5 pcs	44
92.220.0304.1	200 pcs	17
92.220.0304.2	200 pcs	17
92.220.0364.1	200 pcs	17
92.220.0364.2	200 pcs	17
92.220.0504.1	150 pcs	17
92.220.0504.2	150 pcs	17
92.220.0564.1	150 pcs	17
92.220.0564.2	150 pcs	17
92.220.1004.1	75 pcs	17
92.220.1004.2	100 pcs	17
92.220.1064.1	75 pcs	17
92.220.1064.2	75 pcs	17
92.220.2004.1	50 pcs	17
92.231.0364.1	200 pcs	18
92.231.1004.1	100 pcs	18
92.231.1004.2	100 pcs	18
92.231.1064.1	50 pcs	18
92.231.1064.2	50 pcs	18
92.231.2004.1	50 pcs	18
92.231.2004.2	50 pcs	18
92.231.3004.1	25 pcs	18
92.231.3004.2	25 pcs	18
92.231.3064.1	20 pcs	18
92.231.3064.2	20 pcs	18
92.231.4004.1	25 pcs	18
92.231.5004.1	20 pcs	18
92.231.8004.1	10 pcs	18
92.232.1000.1	75 pcs	19
92.232.1000.2	75 pcs	19
92.232.1000.3	75 pcs	19
92.232.1000.4	50 pcs	19
92.232.1000.5	75 pcs	19
92.232.1003.1	75 pcs	21
92.232.1003.2	75 pcs	21
92.232.1003.3	75 pcs	21
92.232.1003.4	50 pcs	21
92.232.1003.5	75 pcs	21
92.232.1004.1	75 pcs	23
92.232.1004.2	75 pcs	23
92.232.1004.3	75 pcs	23
92.232.1004.4	50 pcs	23
92.232.1004.5	75 pcs	23
92.232.1007.1	50 pcs	25
92.232.1007.2	50 pcs	25
92.232.1010.1	75 pcs	19
92.232.1010.2	75 pcs	19
92.232.1010.3	75 pcs	19
92.232.1013.1	75 pcs	21
92.232.1013.2	75 pcs	21
92.232.1014.1	75 pcs	23
92.232.1014.2	75 pcs	23
92.232.1050.1	75 pcs	20
92.232.1050.2	75 pcs	20
92.232.1050.3	75 pcs	20
92.232.1050.4	50 pcs	20
92.232.1050.5	75 pcs	20
92.232.1053.1	75 pcs	22
92.232.1053.2	75 pcs	22
92.232.1053.3	50 pcs	22
92.232.1053.4	50 pcs	22
92.232.1053.5	75 pcs	22
92.232.1054.1	75 pcs	24
92.232.1054.2	75 pcs	24
92.232.1054.3	75 pcs	24
92.232.1054.4	50 pcs	24
92.232.1054.5	75 pcs	24
92.232.1060.1	75 pcs	20
92.232.1060.2	75 pcs	20
92.232.1060.3	75 pcs	20
92.232.1060.4	50 pcs	20
92.232.1060.5	75 pcs	20
92.232.1063.1	75 pcs	22
92.232.1063.2	75 pcs	22
92.232.1063.3	50 pcs	22
92.232.1063.4	50 pcs	22
92.232.1063.5	75 pcs	22
92.232.1064.1	75 pcs	24
92.232.1064.2	75 pcs	24
92.232.1064.3	75 pcs	24
92.232.1064.4	50 pcs	24
92.232.1064.5	75 pcs	24
92.232.1070.1	75 pcs	20
92.232.1070.2	75 pcs	20
92.232.1070.3	75 pcs	20
92.232.1070.4	50 pcs	20
92.232.1070.5	75 pcs	20
92.232.1073.1	75 pcs	22
92.232.1073.2	75 pcs	22
92.232.1073.3	50 pcs	22
92.232.1073.4	50 pcs	22
92.232.1073.5	75 pcs	22
92.232.1074.1	75 pcs	24
92.232.1074.2	75 pcs	24
92.232.1074.3	75 pcs	24
92.232.1074.4	50 pcs	24
92.232.1074.5	75 pcs	24
92.232.2000.1	40 pcs	19
92.232.2000.2	40 pcs	19
92.232.2000.3	40 pcs	19
92.232.2000.4	30 pcs	19
92.232.2000.5	40 pcs	19
92.232.2003.1	50 pcs	21
92.232.2003.2	50 pcs	21
92.232.2003.3	50 pcs	21
92.232.2003.4	30 pcs	21
92.232.2003.5	50 pcs	21
92.232.2004.1	50 pcs	23
92.232.2004.2	50 pcs	23
92.232.2004.3	50 pcs	23
92.232.2004.4	30 pcs	23
92.232.2004.5	50 pcs	23
92.232.2007.1	40 pcs	25
92.232.2007.2	40 pcs	25
92.232.2007.5	40 pcs	25
92.232.2010.1	40 pcs	19
92.232.2010.2	40 pcs	19
92.232.2013.1	50 pcs	21
92.232.2013.2	50 pcs	21
92.232.2014.1	50 pcs	23
92.232.2014.2	50 pcs	23
92.232.2017.1	40 pcs	25
92.232.2050.1	40 pcs	20
92.232.2050.2	40 pcs	20
92.232.2050.3	40 pcs	20
92.232.2050.4	30 pcs	20
92.232.2050.5	40 pcs	20
92.232.2053.1	40 pcs	22
92.232.2053.2	40 pcs	22
92.232.2053.3	40 pcs	22
92.232.2053.4	30 pcs	22
92.232.2053.5	40 pcs	22
92.232.2054.1	40 pcs	24
92.232.2054.2	40 pcs	24
92.232.2054.3	40 pcs	24
92.232.2054.4	30 pcs	24
92.232.2054.5	40 pcs	24
92.232.2060.1	40 pcs	20

INDEX

PART NUMBER | PU | PAGE

92.232.2060.2	40 pcs	**20**
92.232.2060.3	40 pcs	**20**
92.232.2060.4	30 pcs	**20**
92.232.2060.5	40 pcs	**20**
92.232.2063.1	50 pcs	**22**
92.232.2063.2	50 pcs	**22**
92.232.2063.3	50 pcs	**22**
92.232.2063.4	30 pcs	**22**
92.232.2063.5	50 pcs	**22**
92.232.2064.1	50 pcs	**24**
92.232.2064.2	50 pcs	**24**
92.232.2064.3	50 pcs	**24**
92.232.2064.4	30 pcs	**24**
92.232.2064.5	50 pcs	**24**
92.232.2070.1	40 pcs	**20**
92.232.2070.2	40 pcs	**20**
92.232.2070.3	40 pcs	**20**
92.232.2070.4	30 pcs	**20**
92.232.2070.5	40 pcs	**20**
92.232.2073.1	40 pcs	**22**
92.232.2073.2	40 pcs	**22**
92.232.2073.3	40 pcs	**22**
92.232.2073.4	30 pcs	**22**
92.232.2073.5	40 pcs	**22**
92.232.2074.1	40 pcs	**24**
92.232.2074.2	40 pcs	**24**
92.232.2074.3	40 pcs	**24**
92.232.2074.4	30 pcs	**24**
92.232.2074.5	40 pcs	**24**
92.232.3000.1	25 pcs	**19**
92.232.3000.2	25 pcs	**19**
92.232.3000.3	25 pcs	**19**
92.232.3000.4	25 pcs	**19**
92.232.3000.5	25 pcs	**19**
92.232.3003.1	25 pcs	**21**
92.232.3003.2	25 pcs	**21**
92.232.3003.3	25 pcs	**21**
92.232.3003.4	25 pcs	**21**
92.232.3003.5	25 pcs	**21**
92.232.3004.1	25 pcs	**23**
92.232.3004.2	25 pcs	**23**
92.232.3004.3	25 pcs	**23**
92.232.3004.4	25 pcs	**23**
92.232.3004.5	25 pcs	**23**
92.232.3007.1	25 pcs	**25**
92.232.3007.2	25 pcs	**25**
92.232.3007.5	25 pcs	**25**
92.232.3010.1	25 pcs	**19**
92.232.3013.1	25 pcs	**21**
92.232.3014.1	25 pcs	**23**
92.232.3017.1	25 pcs	**25**
92.232.3050.1	25 pcs	**20**
92.232.3050.2	25 pcs	**20**
92.232.3050.3	25 pcs	**20**
92.232.3050.4	25 pcs	**20**
92.232.3050.5	25 pcs	**20**
92.232.3053.1	25 pcs	**22**
92.232.3053.2	25 pcs	**22**
92.232.3053.3	25 pcs	**22**
92.232.3053.4	25 pcs	**22**
92.232.3053.5	25 pcs	**22**
92.232.3054.1	25 pcs	**24**
92.232.3054.2	25 pcs	**24**
92.232.3054.3	25 pcs	**24**
92.232.3054.4	25 pcs	**24**
92.232.3054.5	25 pcs	**24**
92.232.3060.1	25 pcs	**20**
92.232.3060.2	25 pcs	**20**
92.232.3060.3	25 pcs	**20**
92.232.3060.4	25 pcs	**20**
92.232.3060.5	25 pcs	**20**
92.232.3063.1	25 pcs	**22**
92.232.3063.2	25 pcs	**22**
92.232.3063.3	25 pcs	**22**
92.232.3063.4	25 pcs	**22**
92.232.3063.5	25 pcs	**22**
92.232.3064.1	25 pcs	**24**
92.232.3064.2	25 pcs	**24**
92.232.3064.3	25 pcs	**24**
92.232.3064.4	25 pcs	**24**
92.232.3064.5	25 pcs	**24**
92.232.3070.1	25 pcs	**20**
92.232.3070.2	25 pcs	**20**
92.232.3070.3	25 pcs	**20**
92.232.3070.4	25 pcs	**20**
92.232.3070.5	25 pcs	**20**
92.232.3073.1	25 pcs	**22**
92.232.3073.2	25 pcs	**22**
92.232.3073.3	25 pcs	**22**
92.232.3073.4	25 pcs	**22**
92.232.3073.5	25 pcs	**22**
92.232.3074.1	25 pcs	**24**
92.232.3074.2	25 pcs	**24**
92.232.3074.3	25 pcs	**24**
92.232.3074.4	25 pcs	**24**
92.232.3074.5	25 pcs	**24**
92.232.4000.1	25 pcs	**19**
92.232.4000.2	25 pcs	**19**
92.232.4000.3	25 pcs	**19**
92.232.4000.4	20 pcs	**19**
92.232.4000.5	25 pcs	**19**
92.232.4003.1	25 pcs	**21**
92.232.4003.2	25 pcs	**21**
92.232.4003.3	25 pcs	**21**
92.232.4003.4	20 pcs	**21**
92.232.4003.5	25 pcs	**21**
92.232.4004.1	25 pcs	**23**
92.232.4004.2	25 pcs	**23**
92.232.4004.3	25 pcs	**23**
92.232.4004.4	20 pcs	**23**
92.232.4004.5	25 pcs	**23**
92.232.4007.1	20 pcs	**25**
92.232.4007.2	20 pcs	**25**
92.232.4010.1	25 pcs	**19**
92.232.4010.2	25 pcs	**19**
92.232.4013.1	25 pcs	**21**
92.232.4014.1	25 pcs	**23**
92.232.4014.2	25 pcs	**23**
92.232.4017.1	20 pcs	**25**
92.232.4050.1	20 pcs	**20**
92.232.4050.2	20 pcs	**20**
92.232.4050.3	20 pcs	**20**
92.232.4050.4	20 pcs	**20**
92.232.4050.5	20 pcs	**20**
92.232.4053.1	20 pcs	**22**
92.232.4053.2	25 pcs	**22**
92.232.4053.3	20 pcs	**22**
92.232.4053.4	20 pcs	**22**
92.232.4053.5	20 pcs	**22**
92.232.4054.1	25 pcs	**24**
92.232.4054.2	25 pcs	**24**
92.232.4054.3	25 pcs	**24**
92.232.4054.4	20 pcs	**24**
92.232.4054.5	25 pcs	**24**
92.232.4060.1	20 pcs	**20**
92.232.4060.2	20 pcs	**20**
92.232.4060.3	20 pcs	**20**
92.232.4060.4	20 pcs	**20**
92.232.4060.5	20 pcs	**20**
92.232.4063.1	20 pcs	**22**
92.232.4063.2	25 pcs	**22**
92.232.4063.3	20 pcs	**22**
92.232.4063.4	20 pcs	**22**
92.232.4063.5	20 pcs	**22**
92.232.4064.1	25 pcs	**24**
92.232.4064.2	25 pcs	**24**
92.232.4064.3	25 pcs	**24**
92.232.4064.4	20 pcs	**24**
92.232.4064.5	25 pcs	**24**
92.232.4070.1	20 pcs	**20**
92.232.4070.2	20 pcs	**20**
92.232.4070.3	20 pcs	**20**
92.232.4070.4	20 pcs	**20**
92.232.4070.5	20 pcs	**20**
92.232.4073.1	20 pcs	**22**
92.232.4073.2	25 pcs	**22**
92.232.4073.3	20 pcs	**22**
92.232.4073.4	20 pcs	**22**
92.232.4073.5	20 pcs	**22**
92.232.4074.1	25 pcs	**24**
92.232.4074.2	25 pcs	**24**
92.232.4074.3	25 pcs	**24**
92.232.4074.4	20 pcs	**24**
92.232.4074.5	25 pcs	**24**
92.232.5000.1	20 pcs	**19**
92.232.5000.2	20 pcs	**19**
92.232.5000.3	20 pcs	**19**
92.232.5000.4	15 pcs	**19**
92.232.5000.5	20 pcs	**19**
92.232.5003.1	20 pcs	**21**
92.232.5003.2	20 pcs	**21**
92.232.5003.3	20 pcs	**21**
92.232.5003.4	15 pcs	**21**
92.232.5003.5	20 pcs	**21**
92.232.5004.1	20 pcs	**23**
92.232.5004.2	20 pcs	**23**
92.232.5004.3	20 pcs	**23**
92.232.5004.4	15 pcs	**23**
92.232.5004.5	20 pcs	**23**
92.232.5007.1	20 pcs	**25**
92.232.5007.2	20 pcs	**25**
92.232.5010.1	20 pcs	**19**
92.232.5010.2	10 pcs	**19**
92.232.5010.5	20 pcs	**19**
92.232.5013.1	20 pcs	**21**
92.232.5013.2	20 pcs	**21**
92.232.5014.1	20 pcs	**23**
92.232.5017.1	20 pcs	**25**
92.232.5050.1	15 pcs	**20**
92.232.5050.2	20 pcs	**20**
92.232.5050.3	15 pcs	**20**
92.232.5050.4	15 pcs	**20**
92.232.5050.5	15 pcs	**20**
92.232.5053.1	20 pcs	**22**
92.232.5053.2	20 pcs	**22**
92.232.5053.3	20 pcs	**22**
92.232.5053.4	15 pcs	**22**
92.232.5053.5	20 pcs	**22**
92.232.5054.1	20 pcs	**24**
92.232.5054.2	20 pcs	**24**
92.232.5054.3	20 pcs	**24**
92.232.5054.4	15 pcs	**24**
92.232.5054.5	10 pcs	**24**
92.232.5060.1	15 pcs	**20**
92.232.5060.2	15 pcs	**20**
92.232.5060.3	15 pcs	**20**
92.232.5060.4	15 pcs	**20**
92.232.5060.5	15 pcs	**20**
92.232.5063.1	20 pcs	**22**
92.232.5063.2	20 pcs	**22**
92.232.5063.3	20 pcs	**22**
92.232.5063.4	15 pcs	**22**
92.232.5063.5	20 pcs	**22**
92.232.5064.1	20 pcs	**24**
92.232.5064.2	20 pcs	**24**
92.232.5064.3	20 pcs	**24**
92.232.5064.4	15 pcs	**24**
92.232.5064.5	10 pcs	**24**
92.232.5070.1	15 pcs	**20**
92.232.5070.2	20 pcs	**20**
92.232.5070.3	15 pcs	**20**
92.232.5070.4	15 pcs	**20**
92.232.5070.5	15 pcs	**20**
92.232.5073.1	20 pcs	**22**
92.232.5073.2	20 pcs	**22**
92.232.5073.3	20 pcs	**22**
92.232.5073.4	15 pcs	**22**
92.232.5073.5	20 pcs	**22**
92.232.5074.1	20 pcs	**24**
92.232.5074.2	20 pcs	**24**
92.232.5074.3	20 pcs	**24**
92.232.5074.4	15 pcs	**24**
92.232.5074.5	10 pcs	**24**
92.232.6000.1	10 pcs	**19**
92.232.6000.2	10 pcs	**19**
92.232.6000.3	10 pcs	**19**
92.232.6000.4	15 pcs	**19**
92.232.6000.5	10 pcs	**19**
92.232.6003.1	10 pcs	**21**
92.232.6003.2	10 pcs	**21**
92.232.6003.3	10 pcs	**21**
92.232.6003.4	15 pcs	**21**
92.232.6003.5	10 pcs	**21**
92.232.6004.1	10 pcs	**23**
92.232.6004.2	10 pcs	**23**
92.232.6004.3	10 pcs	**23**
92.232.6004.4	15 pcs	**23**
92.232.6004.5	10 pcs	**23**
92.232.6007.1	10 pcs	**25**
92.232.6007.2	10 pcs	**25**
92.232.6010.1	10 pcs	**19**
92.232.6010.2	10 pcs	**19**
92.232.6014.1	10 pcs	**23**
92.232.6050.1	10 pcs	**20**
92.232.6050.2	10 pcs	**20**
92.232.6050.3	10 pcs	**20**
92.232.6050.4	15 pcs	**20**
92.232.6050.5	10 pcs	**20**
92.232.6053.1	10 pcs	**22**
92.232.6053.2	10 pcs	**22**
92.232.6053.3	10 pcs	**22**
92.232.6053.4	15 pcs	**22**
92.232.6053.5	10 pcs	**22**
92.232.6054.1	10 pcs	**24**
92.232.6054.2	10 pcs	**24**
92.232.6054.3	10 pcs	**24**
92.232.6054.4	15 pcs	**24**
92.232.6054.5	10 pcs	**24**
92.232.6060.1	10 pcs	**20**
92.232.6060.2	10 pcs	**20**
92.232.6060.3	10 pcs	**20**
92.232.6060.4	15 pcs	**20**
92.232.6060.5	10 pcs	**20**
92.232.6063.1	10 pcs	**22**
92.232.6063.2	10 pcs	**22**
92.232.6063.3	10 pcs	**22**
92.232.6063.4	15 pcs	**22**
92.232.6063.5	10 pcs	**22**
92.232.6064.1	10 pcs	**24**
92.232.6064.2	10 pcs	**24**

INDEX

PART NUMBER | PU | PAGE

92.232.6064.3	10 pcs	**24**
92.232.6064.4	15 pcs	**24**
92.232.6064.5	10 pcs	**24**
92.232.6070.1	10 pcs	**20**
92.232.6070.2	10 pcs	**20**
92.232.6070.3	10 pcs	**20**
92.232.6070.4	15 pcs	**20**
92.232.6070.5	10 pcs	**20**
92.232.6073.1	10 pcs	**22**
92.232.6073.2	10 pcs	**22**
92.232.6073.3	10 pcs	**22**
92.232.6073.4	15 pcs	**22**
92.232.6073.5	10 pcs	**22**
92.232.6074.1	10 pcs	**24**
92.232.6074.2	10 pcs	**24**
92.232.6074.3	10 pcs	**24**
92.232.6074.4	15 pcs	**24**
92.232.6074.5	10 pcs	**24**
92.232.7000.1	10 pcs	**19**
92.232.7000.2	10 pcs	**19**
92.232.7000.3	10 pcs	**19**
92.232.7000.4	10 pcs	**19**
92.232.7000.5	10 pcs	**19**
92.232.7003.1	10 pcs	**21**
92.232.7003.2	10 pcs	**21**
92.232.7003.3	10 pcs	**21**
92.232.7003.4	10 pcs	**21**
92.232.7003.5	10 pcs	**21**
92.232.7004.1	10 pcs	**23**
92.232.7004.2	10 pcs	**23**
92.232.7004.3	10 pcs	**23**
92.232.7004.4	10 pcs	**23**
92.232.7004.5	10 pcs	**23**
92.232.7007.1	10 pcs	**25**
92.232.7007.2	10 pcs	**25**
92.232.7010.1	10 pcs	**19**
92.232.7050.1	10 pcs	**20**
92.232.7050.2	10 pcs	**20**
92.232.7050.3	10 pcs	**20**
92.232.7050.4	10 pcs	**20**
92.232.7050.5	10 pcs	**20**
92.232.7053.1	10 pcs	**22**
92.232.7053.2	10 pcs	**22**
92.232.7053.3	10 pcs	**22**
92.232.7053.4	10 pcs	**22**
92.232.7053.5	10 pcs	**22**
92.232.7054.1	10 pcs	**24**
92.232.7054.2	10 pcs	**24**
92.232.7054.3	10 pcs	**24**
92.232.7054.4	10 pcs	**24**
92.232.7054.5	10 pcs	**24**
92.232.7060.1	10 pcs	**20**
92.232.7060.2	10 pcs	**20**
92.232.7060.3	10 pcs	**20**
92.232.7060.4	10 pcs	**20**
92.232.7060.5	10 pcs	**20**
92.232.7063.1	10 pcs	**22**
92.232.7063.2	10 pcs	**22**
92.232.7063.3	10 pcs	**22**
92.232.7063.4	10 pcs	**22**
92.232.7063.5	10 pcs	**22**
92.232.7064.1	10 pcs	**24**
92.232.7064.2	10 pcs	**24**
92.232.7064.3	10 pcs	**24**
92.232.7064.4	10 pcs	**24**
92.232.7064.5	10 pcs	**24**
92.232.7070.1	10 pcs	**20**
92.232.7070.2	10 pcs	**20**
92.232.7070.3	10 pcs	**20**
92.232.7070.4	10 pcs	**20**
92.232.7070.5	10 pcs	**20**
92.232.7073.1	10 pcs	**22**
92.232.7073.2	10 pcs	**22**
92.232.7073.3	10 pcs	**22**
92.232.7073.4	10 pcs	**22**
92.232.7073.5	10 pcs	**22**
92.232.7074.1	10 pcs	**24**
92.232.7074.2	10 pcs	**24**
92.232.7074.3	10 pcs	**24**
92.232.7074.4	10 pcs	**24**
92.232.7074.5	10 pcs	**24**
92.232.8000.1	10 pcs	**19**
92.232.8000.2	10 pcs	**19**
92.232.8000.3	10 pcs	**19**
92.232.8000.4	10 pcs	**19**
92.232.8000.5	10 pcs	**19**
92.232.8003.1	10 pcs	**21**
92.232.8003.2	10 pcs	**21**
92.232.8003.3	10 pcs	**21**
92.232.8003.4	10 pcs	**21**
92.232.8003.5	10 pcs	**21**
92.232.8004.1	10 pcs	**23**
92.232.8004.2	10 pcs	**23**
92.232.8004.3	10 pcs	**23**
92.232.8004.4	10 pcs	**23**
92.232.8004.5	10 pcs	**23**
92.232.8007.1	10 pcs	**25**
92.232.8007.2	10 pcs	**25**
92.232.8010.1	10 pcs	**19**
92.232.8010.2	10 pcs	**19**
92.232.8013.1	10 pcs	**21**
92.232.8014.1	10 pcs	**23**
92.232.8050.1	10 pcs	**20**
92.232.8050.2	10 pcs	**20**
92.232.8050.3	10 pcs	**20**
92.232.8050.4	10 pcs	**20**
92.232.8050.5	10 pcs	**20**
92.232.8053.1	10 pcs	**22**
92.232.8053.2	10 pcs	**22**
92.232.8053.3	10 pcs	**22**
92.232.8053.4	10 pcs	**22**
92.232.8053.5	10 pcs	**22**
92.232.8054.1	10 pcs	**24**
92.232.8054.2	10 pcs	**24**
92.232.8054.3	10 pcs	**24**
92.232.8054.4	10 pcs	**24**
92.232.8054.5	10 pcs	**24**
92.232.8060.1	10 pcs	**20**
92.232.8060.2	10 pcs	**20**
92.232.8060.3	10 pcs	**20**
92.232.8060.4	10 pcs	**20**
92.232.8060.5	10 pcs	**20**
92.232.8063.1	10 pcs	**22**
92.232.8063.2	10 pcs	**22**
92.232.8063.3	10 pcs	**22**
92.232.8063.4	10 pcs	**22**
92.232.8063.5	10 pcs	**22**
92.232.8064.1	10 pcs	**24**
92.232.8064.2	10 pcs	**24**
92.232.8064.3	10 pcs	**24**
92.232.8064.4	10 pcs	**24**
92.232.8064.5	10 pcs	**24**
92.232.8070.1	10 pcs	**20**
92.232.8070.2	10 pcs	**20**
92.232.8070.3	10 pcs	**20**
92.232.8070.4	10 pcs	**20**
92.232.8070.5	10 pcs	**20**
92.232.8073.1	10 pcs	**22**
92.232.8073.2	10 pcs	**22**
92.232.8073.3	10 pcs	**22**
92.232.8073.4	10 pcs	**22**
92.232.8073.5	10 pcs	**22**
92.232.8074.1	10 pcs	**24**
92.232.8074.2	10 pcs	**24**
92.232.8074.3	10 pcs	**24**
92.232.8074.4	10 pcs	**24**
92.232.8074.5	10 pcs	**24**
92.238.1000.1	50 pcs	**26**
92.238.1000.2	50 pcs	**26**
92.238.1000.3	50 pcs	**26**
92.238.1000.4	50 pcs	**26**
92.238.1000.5	50 pcs	**26**
92.238.1003.1	50 pcs	**28**
92.238.1003.2	50 pcs	**28**
92.238.1003.3	50 pcs	**28**
92.238.1003.4	50 pcs	**28**
92.238.1003.5	50 pcs	**28**
92.238.1004.1	50 pcs	**30**
92.238.1004.2	50 pcs	**30**
92.238.1004.3	50 pcs	**30**
92.238.1004.4	50 pcs	**30**
92.238.1004.5	50 pcs	**30**
92.238.1007.1	50 pcs	**32**
92.238.1007.2	50 pcs	**32**
92.238.1010.1	50 pcs	**26**
92.238.1010.5	50 pcs	**26**
92.238.1013.1	50 pcs	**28**
92.238.1013.5	50 pcs	**28**
92.238.1014.1	50 pcs	**30**
92.238.1014.2	50 pcs	**30**
92.238.1050.1	50 pcs	**27**
92.238.1050.2	50 pcs	**27**
92.238.1050.3	50 pcs	**27**
92.238.1050.4	50 pcs	**27**
92.238.1050.5	50 pcs	**27**
92.238.1053.1	50 pcs	**29**
92.238.1053.2	50 pcs	**29**
92.238.1053.3	50 pcs	**29**
92.238.1053.4	50 pcs	**29**
92.238.1053.5	50 pcs	**29**
92.238.1054.1	50 pcs	**31**
92.238.1054.2	50 pcs	**31**
92.238.1054.3	50 pcs	**31**
92.238.1054.4	50 pcs	**31**
92.238.1054.5	50 pcs	**31**
92.238.1060.1	50 pcs	**27**
92.238.1060.2	50 pcs	**27**
92.238.1060.3	50 pcs	**27**
92.238.1060.4	50 pcs	**27**
92.238.1060.5	50 pcs	**27**
92.238.1063.1	50 pcs	**29**
92.238.1063.2	50 pcs	**29**
92.238.1063.3	50 pcs	**29**
92.238.1063.4	50 pcs	**29**
92.238.1063.5	50 pcs	**29**
92.238.1064.1	50 pcs	**31**
92.238.1064.2	50 pcs	**31**
92.238.1064.3	50 pcs	**31**
92.238.1064.4	50 pcs	**31**
92.238.1064.5	50 pcs	**31**
92.238.1070.1	50 pcs	**27**
92.238.1070.2	50 pcs	**27**
92.238.1070.3	50 pcs	**27**
92.238.1070.4	50 pcs	**27**
92.238.1070.5	50 pcs	**27**
92.238.1073.1	50 pcs	**29**
92.238.1073.2	50 pcs	**29**
92.238.1073.3	50 pcs	**29**
92.238.1073.4	50 pcs	**29**
92.238.1073.5	50 pcs	**29**
92.238.1074.1	50 pcs	**31**
92.238.1074.2	50 pcs	**31**
92.238.1074.3	50 pcs	**31**
92.238.1074.4	50 pcs	**31**
92.238.1074.5	50 pcs	**31**
92.238.2000.1	25 pcs	**26**
92.238.2000.2	25 pcs	**26**
92.238.2000.3	25 pcs	**26**
92.238.2000.4	25 pcs	**26**
92.238.2000.5	25 pcs	**26**
92.238.2003.1	25 pcs	**28**
92.238.2003.2	25 pcs	**28**
92.238.2003.3	25 pcs	**28**
92.238.2003.4	25 pcs	**28**
92.238.2003.5	25 pcs	**28**
92.238.2004.1	25 pcs	**30**
92.238.2004.2	25 pcs	**30**
92.238.2004.3	25 pcs	**30**
92.238.2004.4	25 pcs	**30**
92.238.2004.5	25 pcs	**30**
92.238.2007.1	25 pcs	**32**
92.238.2007.2	25 pcs	**32**
92.238.2010.1	25 pcs	**26**
92.238.2010.2	25 pcs	**26**
92.238.2010.5	25 pcs	**26**
92.238.2013.1	25 pcs	**28**
92.238.2014.1	25 pcs	**30**
92.238.2050.1	25 pcs	**27**
92.238.2050.2	25 pcs	**27**
92.238.2050.3	25 pcs	**27**
92.238.2050.4	25 pcs	**27**
92.238.2050.5	25 pcs	**27**
92.238.2053.1	25 pcs	**29**
92.238.2053.2	25 pcs	**29**
92.238.2053.3	25 pcs	**29**
92.238.2053.4	25 pcs	**29**
92.238.2053.5	25 pcs	**29**
92.238.2054.1	25 pcs	**31**
92.238.2054.2	25 pcs	**31**
92.238.2054.3	25 pcs	**31**
92.238.2054.4	25 pcs	**31**
92.238.2054.5	25 pcs	**31**
92.238.2060.1	25 pcs	**27**
92.238.2060.2	25 pcs	**27**
92.238.2060.3	25 pcs	**27**
92.238.2060.4	25 pcs	**27**
92.238.2060.5	25 pcs	**27**
92.238.2063.1	25 pcs	**29**
92.238.2063.2	25 pcs	**29**
92.238.2063.3	25 pcs	**29**
92.238.2063.4	25 pcs	**29**
92.238.2063.5	25 pcs	**29**
92.238.2064.1	25 pcs	**31**
92.238.2064.2	25 pcs	**31**
92.238.2064.3	25 pcs	**31**
92.238.2064.4	25 pcs	**31**
92.238.2064.5	25 pcs	**31**
92.238.2070.1	25 pcs	**27**
92.238.2070.2	25 pcs	**27**
92.238.2070.3	25 pcs	**27**
92.238.2070.4	25 pcs	**27**
92.238.2070.5	25 pcs	**27**
92.238.2073.1	25 pcs	**29**
92.238.2073.2	25 pcs	**29**
92.238.2073.3	25 pcs	**29**
92.238.2073.4	25 pcs	**29**
92.238.2073.5	25 pcs	**29**
92.238.2074.1	25 pcs	**31**
92.238.2074.2	25 pcs	**31**
92.238.2074.3	25 pcs	**31**

INDEX

PART NUMBER | PU | PAGE

92.238.2074.4	25 pcs	**31**
92.238.2074.5	25 pcs	**31**
92.238.3000.1	20 pcs	**26**
92.238.3000.2	20 pcs	**26**
92.238.3000.3	20 pcs	**26**
92.238.3000.4	20 pcs	**26**
92.238.3000.5	20 pcs	**26**
92.238.3003.1	20 pcs	**28**
92.238.3003.2	20 pcs	**28**
92.238.3003.3	20 pcs	**28**
92.238.3003.4	20 pcs	**28**
92.238.3003.5	20 pcs	**28**
92.238.3004.1	20 pcs	**30**
92.238.3004.2	20 pcs	**30**
92.238.3004.3	20 pcs	**30**
92.238.3004.4	20 pcs	**30**
92.238.3004.5	20 pcs	**30**
92.238.3007.1	15 pcs	**32**
92.238.3007.2	15 pcs	**32**
92.238.3010.1	20 pcs	**26**
92.238.3010.2	20 pcs	**26**
92.238.3013.1	20 pcs	**28**
92.238.3013.3	20 pcs	**28**
92.238.3050.1	15 pcs	**27**
92.238.3050.2	15 pcs	**27**
92.238.3050.3	15 pcs	**27**
92.238.3050.4	20 pcs	**27**
92.238.3050.5	15 pcs	**27**
92.238.3053.1	15 pcs	**29**
92.238.3053.2	15 pcs	**29**
92.238.3053.3	15 pcs	**29**
92.238.3053.4	20 pcs	**29**
92.238.3053.5	15 pcs	**29**
92.238.3054.1	15 pcs	**31**
92.238.3054.2	15 pcs	**31**
92.238.3054.3	15 pcs	**31**
92.238.3054.4	20 pcs	**31**
92.238.3054.5	15 pcs	**31**
92.238.3060.1	15 pcs	**27**
92.238.3060.2	15 pcs	**27**
92.238.3060.3	15 pcs	**27**
92.238.3060.4	20 pcs	**27**
92.238.3060.5	15 pcs	**27**
92.238.3063.1	15 pcs	**29**
92.238.3063.2	15 pcs	**29**
92.238.3063.3	15 pcs	**29**
92.238.3063.4	20 pcs	**29**
92.238.3063.5	15 pcs	**29**
92.238.3064.1	15 pcs	**31**
92.238.3064.2	15 pcs	**31**
92.238.3064.3	15 pcs	**31**
92.238.3064.4	20 pcs	**31**
92.238.3064.5	15 pcs	**31**
92.238.3070.1	15 pcs	**27**
92.238.3070.2	15 pcs	**27**
92.238.3070.3	15 pcs	**27**
92.238.3070.4	20 pcs	**27**
92.238.3070.5	15 pcs	**27**
92.238.3073.1	15 pcs	**29**
92.238.3073.2	15 pcs	**29**
92.238.3073.3	15 pcs	**29**
92.238.3073.4	20 pcs	**29**
92.238.3073.5	15 pcs	**29**
92.238.3074.1	15 pcs	**31**
92.238.3074.2	15 pcs	**31**
92.238.3074.3	15 pcs	**31**
92.238.3074.4	20 pcs	**31**
92.238.3074.5	15 pcs	**31**
92.238.4000.1	15 pcs	**26**
92.238.4000.2	15 pcs	**26**
92.238.4000.3	15 pcs	**26**
92.238.4000.4	15 pcs	**26**
92.238.4000.5	15 pcs	**26**
92.238.4003.1	15 pcs	**28**
92.238.4003.2	15 pcs	**28**
92.238.4003.3	15 pcs	**28**
92.238.4003.4	15 pcs	**28**
92.238.4003.5	15 pcs	**28**
92.238.4004.1	15 pcs	**30**
92.238.4004.2	15 pcs	**30**
92.238.4004.3	15 pcs	**30**
92.238.4004.4	15 pcs	**30**
92.238.4004.5	15 pcs	**30**
92.238.4007.1	15 pcs	**32**
92.238.4010.1	15 pcs	**26**
92.238.4013.1	15 pcs	**28**
92.238.4050.1	10 pcs	**27**
92.238.4050.2	10 pcs	**27**
92.238.4050.3	10 pcs	**27**
92.238.4050.4	15 pcs	**27**
92.238.4050.5	10 pcs	**27**
92.238.4053.1	15 pcs	**29**
92.238.4053.2	15 pcs	**29**
92.238.4053.3	15 pcs	**29**
92.238.4053.4	15 pcs	**29**
92.238.4053.5	15 pcs	**29**
92.238.4054.1	15 pcs	**31**
92.238.4054.2	15 pcs	**31**
92.238.4054.3	15 pcs	**31**
92.238.4054.4	15 pcs	**31**
92.238.4054.5	15 pcs	**31**
92.238.4060.1	10 pcs	**27**
92.238.4060.2	10 pcs	**27**
92.238.4060.3	10 pcs	**27**
92.238.4060.4	15 pcs	**27**
92.238.4060.5	10 pcs	**27**
92.238.4063.1	15 pcs	**29**
92.238.4063.2	15 pcs	**29**
92.238.4063.3	15 pcs	**29**
92.238.4063.4	15 pcs	**29**
92.238.4063.5	15 pcs	**29**
92.238.4064.1	15 pcs	**31**
92.238.4064.2	15 pcs	**31**
92.238.4064.3	15 pcs	**31**
92.238.4064.4	15 pcs	**31**
92.238.4064.5	15 pcs	**31**
92.238.4070.1	10 pcs	**27**
92.238.4070.2	10 pcs	**27**
92.238.4070.3	10 pcs	**27**
92.238.4070.4	15 pcs	**27**
92.238.4070.5	10 pcs	**27**
92.238.4073.1	15 pcs	**29**
92.238.4073.2	15 pcs	**29**
92.238.4073.3	15 pcs	**29**
92.238.4073.4	15 pcs	**29**
92.238.4073.5	15 pcs	**29**
92.238.4074.1	15 pcs	**31**
92.238.4074.2	15 pcs	**31**
92.238.4074.3	15 pcs	**31**
92.238.4074.4	15 pcs	**31**
92.238.4074.5	15 pcs	**31**
92.238.5000.1	10 pcs	**26**
92.238.5000.2	10 pcs	**26**
92.238.5000.3	10 pcs	**26**
92.238.5000.4	10 pcs	**26**
92.238.5000.5	10 pcs	**26**
92.238.5003.1	10 pcs	**28**
92.238.5003.2	10 pcs	**28**
92.238.5003.3	10 pcs	**28**
92.238.5003.4	10 pcs	**28**
92.238.5003.5	10 pcs	**28**
92.238.5004.1	10 pcs	**30**
92.238.5004.2	10 pcs	**30**
92.238.5004.3	10 pcs	**30**
92.238.5004.4	10 pcs	**30**
92.238.5004.5	10 pcs	**30**
92.238.5007.1	10 pcs	**32**
92.238.5007.2	10 pcs	**32**
92.238.5010.1	10 pcs	**26**
92.238.5010.2	10 pcs	**26**
92.238.5013.1	10 pcs	**28**
92.238.5050.1	10 pcs	**27**
92.238.5050.2	10 pcs	**27**
92.238.5050.3	10 pcs	**27**
92.238.5050.4	10 pcs	**27**
92.238.5050.5	10 pcs	**27**
92.238.5053.1	10 pcs	**29**
92.238.5053.2	10 pcs	**29**
92.238.5053.3	10 pcs	**29**
92.238.5053.4	10 pcs	**29**
92.238.5053.5	10 pcs	**29**
92.238.5054.1	10 pcs	**31**
92.238.5054.2	10 pcs	**31**
92.238.5054.3	10 pcs	**31**
92.238.5054.4	10 pcs	**31**
92.238.5054.5	10 pcs	**31**
92.238.5060.1	10 pcs	**27**
92.238.5060.2	10 pcs	**27**
92.238.5060.3	10 pcs	**27**
92.238.5060.4	10 pcs	**27**
92.238.5060.5	10 pcs	**27**
92.238.5063.1	10 pcs	**29**
92.238.5063.2	10 pcs	**29**
92.238.5063.3	10 pcs	**29**
92.238.5063.4	10 pcs	**29**
92.238.5063.5	10 pcs	**29**
92.238.5064.1	10 pcs	**31**
92.238.5064.2	10 pcs	**31**
92.238.5064.3	10 pcs	**31**
92.238.5064.4	10 pcs	**31**
92.238.5064.5	10 pcs	**31**
92.238.5070.1	10 pcs	**27**
92.238.5070.2	10 pcs	**27**
92.238.5070.3	10 pcs	**27**
92.238.5070.4	10 pcs	**27**
92.238.5070.5	10 pcs	**27**
92.238.5073.1	10 pcs	**29**
92.238.5073.2	10 pcs	**29**
92.238.5073.3	10 pcs	**29**
92.238.5073.4	10 pcs	**29**
92.238.5073.5	10 pcs	**29**
92.238.5074.1	10 pcs	**31**
92.238.5074.2	10 pcs	**31**
92.238.5074.3	10 pcs	**31**
92.238.5074.4	10 pcs	**31**
92.238.5074.5	10 pcs	**31**
92.238.6000.1	10 pcs	**26**
92.238.6000.2	10 pcs	**26**
92.238.6000.3	10 pcs	**26**
92.238.6000.4	10 pcs	**26**
92.238.6000.5	10 pcs	**26**
92.238.6003.1	10 pcs	**28**
92.238.6003.2	10 pcs	**28**
92.238.6003.3	10 pcs	**28**
92.238.6003.4	10 pcs	**28**
92.238.6003.5	10 pcs	**28**
92.238.6004.1	10 pcs	**30**
92.238.6004.2	10 pcs	**30**
92.238.6004.3	10 pcs	**30**
92.238.6004.4	10 pcs	**30**
92.238.6004.5	10 pcs	**30**
92.238.6007.1	10 pcs	**32**
92.238.6010.1	10 pcs	**26**
92.238.6010.2	10 pcs	**26**
92.238.6013.1	10 pcs	**28**
92.238.6050.1	10 pcs	**27**
92.238.6050.2	10 pcs	**27**
92.238.6050.3	10 pcs	**27**
92.238.6050.4	10 pcs	**27**
92.238.6050.5	10 pcs	**27**
92.238.6053.1	10 pcs	**29**
92.238.6053.2	10 pcs	**29**
92.238.6053.3	10 pcs	**29**
92.238.6053.4	10 pcs	**29**
92.238.6053.5	10 pcs	**29**
92.238.6054.1	10 pcs	**31**
92.238.6054.2	10 pcs	**31**
92.238.6054.3	10 pcs	**31**
92.238.6054.4	10 pcs	**31**
92.238.6054.5	10 pcs	**31**
92.238.6060.1	10 pcs	**27**
92.238.6060.2	10 pcs	**27**
92.238.6060.3	10 pcs	**27**
92.238.6060.4	10 pcs	**27**
92.238.6060.5	10 pcs	**27**
92.238.6063.1	10 pcs	**29**
92.238.6063.2	10 pcs	**29**
92.238.6063.3	10 pcs	**29**
92.238.6063.4	10 pcs	**29**
92.238.6063.5	10 pcs	**29**
92.238.6064.1	10 pcs	**31**
92.238.6064.2	10 pcs	**31**
92.238.6064.3	10 pcs	**31**
92.238.6064.4	10 pcs	**31**
92.238.6064.5	10 pcs	**31**
92.238.6070.1	10 pcs	**27**
92.238.6070.2	10 pcs	**27**
92.238.6070.3	10 pcs	**27**
92.238.6070.4	10 pcs	**27**
92.238.6070.5	10 pcs	**27**
92.238.6073.1	10 pcs	**29**
92.238.6073.2	10 pcs	**29**
92.238.6073.3	10 pcs	**29**
92.238.6073.4	10 pcs	**29**
92.238.6073.5	10 pcs	**29**
92.238.6074.1	10 pcs	**31**
92.238.6074.2	10 pcs	**31**
92.238.6074.3	10 pcs	**31**
92.238.6074.4	10 pcs	**31**
92.238.6074.5	10 pcs	**31**
92.238.7000.1	5 pcs	**26**
92.238.7000.2	5 pcs	**26**
92.238.7000.3	5 pcs	**26**
92.238.7000.4	5 pcs	**26**
92.238.7000.5	5 pcs	**26**
92.238.7003.1	5 pcs	**28**
92.238.7003.2	5 pcs	**28**
92.238.7003.3	10 pcs	**28**
92.238.7003.4	5 pcs	**28**
92.238.7003.5	5 pcs	**28**
92.238.7004.1	5 pcs	**30**
92.238.7004.2	5 pcs	**30**
92.238.7004.3	5 pcs	**30**
92.238.7004.4	5 pcs	**30**
92.238.7004.5	5 pcs	**30**
92.238.7007.1	5 pcs	**32**
92.238.7007.2	5 pcs	**32**
92.238.7010.1	5 pcs	**26**
92.238.7013.1	5 pcs	**28**
92.238.7050.1	5 pcs	**27**

INDEX

PART NUMBER | PU | PAGE

92.238.7050.2	5 pcs	**27**
92.238.7050.3	5 pcs	**27**
92.238.7050.4	5 pcs	**27**
92.238.7050.5	5 pcs	**27**
92.238.7053.1	5 pcs	**29**
92.238.7053.2	5 pcs	**29**
92.238.7053.3	5 pcs	**29**
92.238.7053.4	5 pcs	**29**
92.238.7053.5	5 pcs	**29**
92.238.7054.1	5 pcs	**31**
92.238.7054.2	5 pcs	**31**
92.238.7054.3	5 pcs	**31**
92.238.7054.4	5 pcs	**31**
92.238.7054.5	10 pcs	**31**
92.238.7060.1	5 pcs	**27**
92.238.7060.2	5 pcs	**27**
92.238.7060.3	5 pcs	**27**
92.238.7060.4	5 pcs	**27**
92.238.7060.5	5 pcs	**27**
92.238.7063.1	5 pcs	**29**
92.238.7063.2	5 pcs	**29**
92.238.7063.3	5 pcs	**29**
92.238.7063.4	5 pcs	**29**
92.238.7063.5	5 pcs	**29**
92.238.7064.1	5 pcs	**31**
92.238.7064.2	5 pcs	**31**
92.238.7064.3	5 pcs	**31**
92.238.7064.4	5 pcs	**31**
92.238.7064.5	10 pcs	**31**
92.238.7070.1	5 pcs	**27**
92.238.7070.2	5 pcs	**27**
92.238.7070.3	5 pcs	**27**
92.238.7070.4	5 pcs	**27**
92.238.7070.5	5 pcs	**27**
92.238.7073.1	5 pcs	**29**
92.238.7073.2	5 pcs	**29**
92.238.7073.3	5 pcs	**29**
92.238.7073.4	5 pcs	**29**
92.238.7073.5	5 pcs	**29**
92.238.7074.1	5 pcs	**31**
92.238.7074.2	5 pcs	**31**
92.238.7074.3	5 pcs	**31**
92.238.7074.4	5 pcs	**31**
92.238.7074.5	10 pcs	**31**
92.238.8000.1	5 pcs	**26**
92.238.8000.2	5 pcs	**26**
92.238.8000.3	5 pcs	**26**
92.238.8000.4	5 pcs	**26**
92.238.8000.5	5 pcs	**26**
92.238.8003.1	5 pcs	**28**
92.238.8003.2	5 pcs	**28**
92.238.8003.3	5 pcs	**28**
92.238.8003.4	5 pcs	**28**
92.238.8003.5	5 pcs	**28**
92.238.8004.1	5 pcs	**30**
92.238.8004.2	5 pcs	**30**
92.238.8004.3	5 pcs	**30**
92.238.8004.4	5 pcs	**30**
92.238.8004.5	5 pcs	**30**
92.238.8007.1	5 pcs	**32**
92.238.8010.1	5 pcs	**26**
92.238.8010.2	5 pcs	**26**
92.238.8013.1	5 pcs	**28**
92.238.8013.2	5 pcs	**28**
92.238.8014.1	5 pcs	**30**
92.238.8014.2	5 pcs	**30**
92.238.8050.1	5 pcs	**27**
92.238.8050.2	5 pcs	**27**
92.238.8050.3	5 pcs	**27**
92.238.8050.4	5 pcs	**27**
92.238.8050.5	5 pcs	**27**
92.238.8053.1	5 pcs	**29**
92.238.8053.2	5 pcs	**29**
92.238.8053.3	5 pcs	**29**
92.238.8053.4	5 pcs	**29**
92.238.8053.5	5 pcs	**29**
92.238.8054.1	5 pcs	**31**
92.238.8054.2	5 pcs	**31**
92.238.8054.3	5 pcs	**31**
92.238.8054.4	5 pcs	**31**
92.238.8054.5	5 pcs	**31**
92.238.8060.1	5 pcs	**27**
92.238.8060.2	5 pcs	**27**
92.238.8060.3	5 pcs	**27**
92.238.8060.4	5 pcs	**27**
92.238.8060.5	5 pcs	**27**
92.238.8063.1	5 pcs	**29**
92.238.8063.2	5 pcs	**29**
92.238.8063.3	5 pcs	**29**
92.238.8063.4	5 pcs	**29**
92.238.8063.5	5 pcs	**29**
92.238.8064.1	5 pcs	**31**
92.238.8064.2	5 pcs	**31**
92.238.8064.3	5 pcs	**31**
92.238.8064.4	5 pcs	**31**
92.238.8064.5	5 pcs	**31**
92.238.8070.1	5 pcs	**27**
92.238.8070.2	5 pcs	**27**
92.238.8070.3	5 pcs	**27**
92.238.8070.4	5 pcs	**27**
92.238.8070.5	5 pcs	**27**
92.238.8073.1	5 pcs	**29**
92.238.8073.2	5 pcs	**29**
92.238.8073.3	5 pcs	**29**
92.238.8073.4	5 pcs	**29**
92.238.8073.5	5 pcs	**29**
92.238.8074.1	5 pcs	**31**
92.238.8074.2	5 pcs	**31**
92.238.8074.3	5 pcs	**31**
92.238.8074.4	5 pcs	**31**
92.238.8074.5	5 pcs	**31**
92.255.1064.2	30 pcs	**53**
92.255.2064.2	20 pcs	**53**
92.255.3064.2	15 pcs	**53**
92.255.4064.2	10 pcs	**53**
92.255.5064.2	10 pcs	**53**
92.255.6064.2	8 pcs	**53**
92.255.7064.2	5 pcs	**53**
92.255.8064.2	5 pcs	**53**
92.256.0504.9	50 pcs	**54**
92.256.1064.2	30 pcs	**54**
92.256.2064.2	20 pcs	**54**
92.256.3064.2	15 pcs	**54**
92.256.4064.2	10 pcs	**54**
92.256.5064.2	10 pcs	**54**
92.256.6064.2	8 pcs	**54**
92.256.7064.2	5 pcs	**54**
92.256.8064.2	5 pcs	**54**
92.257.1000.0	30 pcs	**57**
92.257.1000.1	30 pcs	**57**
92.257.1000.2	30 pcs	**57**
92.257.1000.7	30 pcs	**57**
92.257.1000.8	30 pcs	**57**
92.257.1000.9	30 pcs	**57**
92.257.1003.0	30 pcs	**59**
92.257.1003.1	30 pcs	**59**
92.257.1003.2	30 pcs	**59**
92.257.1003.7	30 pcs	**59**
92.257.1003.9	30 pcs	**59**
92.257.1004.0	30 pcs	**61**
92.257.1004.1	30 pcs	**61**
92.257.1004.2	30 pcs	**61**
92.257.1004.7	30 pcs	**61**
92.257.1004.9	30 pcs	**61**
92.257.1050.0	30 pcs	**58**
92.257.1050.1	30 pcs	**58**
92.257.1050.2	30 pcs	**58**
92.257.1050.7	30 pcs	**58**
92.257.1050.8	30 pcs	**58**
92.257.1050.9	30 pcs	**58**
92.257.1053.0	30 pcs	**59**
92.257.1053.1	30 pcs	**59**
92.257.1053.2	30 pcs	**59**
92.257.1053.7	30 pcs	**59**
92.257.1053.8	30 pcs	**59**
92.257.1053.9	30 pcs	**59**
92.257.1054.0	30 pcs	**62**
92.257.1054.1	30 pcs	**62**
92.257.1054.2	30 pcs	**62**
92.257.1054.7	30 pcs	**62**
92.257.1054.8	30 pcs	**62**
92.257.1054.9	30 pcs	**62**
92.257.1060.0	30 pcs	**58**
92.257.1060.1	30 pcs	**58**
92.257.1060.2	30 pcs	**58**
92.257.1060.7	30 pcs	**58**
92.257.1060.8	30 pcs	**58**
92.257.1060.9	30 pcs	**58**
92.257.1063.0	30 pcs	**60**
92.257.1063.1	30 pcs	**60**
92.257.1063.2	30 pcs	**60**
92.257.1063.7	30 pcs	**60**
92.257.1063.8	30 pcs	**60**
92.257.1063.9	30 pcs	**60**
92.257.1064.0	30 pcs	**62**
92.257.1064.1	30 pcs	**62**
92.257.1064.2	30 pcs	**62**
92.257.1064.7	30 pcs	**62**
92.257.1064.8	30 pcs	**62**
92.257.1064.9	30 pcs	**62**
92.257.1070.0	30 pcs	**57**
92.257.1070.1	30 pcs	**57**
92.257.1070.2	30 pcs	**57**
92.257.1070.7	30 pcs	**57**
92.257.1070.8	30 pcs	**57**
92.257.1070.9	30 pcs	**57**
92.257.1073.0	30 pcs	**59**
92.257.1073.1	30 pcs	**59**
92.257.1073.2	30 pcs	**59**
92.257.1073.7	30 pcs	**59**
92.257.1073.8	30 pcs	**59**
92.257.1073.9	30 pcs	**59**
92.257.1074.0	30 pcs	**61**
92.257.1074.1	30 pcs	**61**
92.257.1074.2	30 pcs	**61**
92.257.1074.7	30 pcs	**61**
92.257.1074.8	30 pcs	**61**
92.257.1074.9	30 pcs	**61**
92.257.2000.0	20 pcs	**57**
92.257.2000.1	20 pcs	**57**
92.257.2000.2	20 pcs	**57**
92.257.2000.7	20 pcs	**57**
92.257.2000.8	20 pcs	**57**
92.257.2000.9	20 pcs	**57**
92.257.2003.0	20 pcs	**59**
92.257.2003.1	20 pcs	**59**
92.257.2003.2	20 pcs	**59**
92.257.2003.7	20 pcs	**59**
92.257.2003.9	20 pcs	**59**
92.257.2004.0	20 pcs	**61**
92.257.2004.1	20 pcs	**61**
92.257.2004.2	20 pcs	**61**
92.257.2004.7	20 pcs	**61**
92.257.2004.9	20 pcs	**61**
92.257.2010.1	20 pcs	**57**
92.257.2014.1	20 pcs	**61**
92.257.2050.0	20 pcs	**58**
92.257.2050.1	20 pcs	**58**
92.257.2050.2	20 pcs	**58**
92.257.2050.7	20 pcs	**58**
92.257.2050.8	20 pcs	**58**
92.257.2050.9	20 pcs	**58**
92.257.2053.0	20 pcs	**59**
92.257.2053.1	20 pcs	**59**
92.257.2053.2	20 pcs	**59**
92.257.2053.7	20 pcs	**59**
92.257.2053.8	20 pcs	**59**
92.257.2053.9	20 pcs	**59**
92.257.2054.0	20 pcs	**62**
92.257.2054.1	20 pcs	**62**
92.257.2054.2	20 pcs	**62**
92.257.2054.7	20 pcs	**62**
92.257.2054.8	20 pcs	**62**
92.257.2054.9	20 pcs	**62**
92.257.2060.0	20 pcs	**58**
92.257.2060.1	20 pcs	**58**
92.257.2060.2	20 pcs	**58**
92.257.2060.7	20 pcs	**58**
92.257.2060.8	20 pcs	**58**
92.257.2060.9	20 pcs	**58**
92.257.2063.0	20 pcs	**60**
92.257.2063.1	20 pcs	**60**
92.257.2063.2	20 pcs	**60**
92.257.2063.7	20 pcs	**60**
92.257.2063.8	20 pcs	**60**
92.257.2063.9	20 pcs	**60**
92.257.2064.0	20 pcs	**62**
92.257.2064.1	20 pcs	**62**
92.257.2064.2	20 pcs	**62**
92.257.2064.7	20 pcs	**62**
92.257.2064.8	20 pcs	**62**
92.257.2064.9	20 pcs	**62**
92.257.2070.0	20 pcs	**57**
92.257.2070.1	20 pcs	**57**
92.257.2070.2	20 pcs	**57**
92.257.2070.7	20 pcs	**57**
92.257.2070.8	20 pcs	**57**
92.257.2070.9	20 pcs	**57**
92.257.2073.0	20 pcs	**59**
92.257.2073.1	20 pcs	**59**
92.257.2073.2	20 pcs	**59**
92.257.2073.7	20 pcs	**59**
92.257.2073.8	20 pcs	**59**
92.257.2073.9	20 pcs	**59**
92.257.2074.0	20 pcs	**61**
92.257.2074.1	20 pcs	**61**
92.257.2074.2	20 pcs	**61**
92.257.2074.7	20 pcs	**61**
92.257.2074.8	20 pcs	**61**
92.257.2074.9	20 pcs	**61**
92.257.3000.0	15 pcs	**57**
92.257.3000.1	15 pcs	**57**
92.257.3000.2	15 pcs	**57**
92.257.3000.7	15 pcs	**57**
92.257.3000.8	15 pcs	**57**
92.257.3000.9	15 pcs	**57**
92.257.3003.0	15 pcs	**59**
92.257.3003.1	15 pcs	**59**
92.257.3003.2	15 pcs	**59**
92.257.3003.7	20 pcs	**59**

INDEX

PART NUMBER | PU | PAGE

92.257.3003.9	15 pcs	**59**
92.257.3004.0	15 pcs	**61**
92.257.3004.1	15 pcs	**61**
92.257.3004.2	15 pcs	**61**
92.257.3004.7	15 pcs	**61**
92.257.3004.9	15 pcs	**61**
92.257.3010.1	15 pcs	**57**
92.257.3014.1	15 pcs	**61**
92.257.3050.0	15 pcs	**58**
92.257.3050.1	15 pcs	**58**
92.257.3050.2	15 pcs	**58**
92.257.3050.7	15 pcs	**58**
92.257.3050.8	15 pcs	**58**
92.257.3050.9	15 pcs	**58**
92.257.3053.0	15 pcs	**59**
92.257.3053.1	15 pcs	**59**
92.257.3053.2	15 pcs	**59**
92.257.3053.7	15 pcs	**59**
92.257.3053.8	15 pcs	**59**
92.257.3053.9	15 pcs	**59**
92.257.3054.0	15 pcs	**62**
92.257.3054.1	15 pcs	**62**
92.257.3054.2	15 pcs	**62**
92.257.3054.7	15 pcs	**62**
92.257.3054.8	15 pcs	**62**
92.257.3054.9	15 pcs	**62**
92.257.3060.0	15 pcs	**58**
92.257.3060.1	15 pcs	**58**
92.257.3060.2	15 pcs	**58**
92.257.3060.7	15 pcs	**58**
92.257.3060.8	15 pcs	**58**
92.257.3060.9	15 pcs	**58**
92.257.3063.0	15 pcs	**60**
92.257.3063.1	15 pcs	**60**
92.257.3063.2	15 pcs	**60**
92.257.3063.7	15 pcs	**60**
92.257.3063.8	15 pcs	**60**
92.257.3063.9	15 pcs	**60**
92.257.3064.0	15 pcs	**62**
92.257.3064.1	15 pcs	**62**
92.257.3064.2	15 pcs	**62**
92.257.3064.7	15 pcs	**62**
92.257.3064.8	15 pcs	**62**
92.257.3064.9	15 pcs	**62**
92.257.3070.0	15 pcs	**57**
92.257.3070.1	15 pcs	**57**
92.257.3070.2	15 pcs	**57**
92.257.3070.7	15 pcs	**57**
92.257.3070.8	15 pcs	**57**
92.257.3070.9	15 pcs	**57**
92.257.3073.0	15 pcs	**59**
92.257.3073.1	15 pcs	**59**
92.257.3073.2	15 pcs	**59**
92.257.3073.7	15 pcs	**59**
92.257.3073.8	15 pcs	**59**
92.257.3073.9	15 pcs	**59**
92.257.3074.0	15 pcs	**61**
92.257.3074.1	15 pcs	**61**
92.257.3074.2	15 pcs	**61**
92.257.3074.7	15 pcs	**61**
92.257.3074.8	15 pcs	**61**
92.257.3074.9	15 pcs	**61**
92.257.4000.0	10 pcs	**57**
92.257.4000.1	10 pcs	**57**
92.257.4000.2	10 pcs	**57**
92.257.4000.7	10 pcs	**57**
92.257.4000.8	10 pcs	**57**
92.257.4000.9	10 pcs	**57**
92.257.4003.0	10 pcs	**59**
92.257.4003.1	10 pcs	**59**
92.257.4003.2	10 pcs	**59**
92.257.4003.7	10 pcs	**59**
92.257.4003.9	10 pcs	**59**
92.257.4004.0	10 pcs	**61**
92.257.4004.1	10 pcs	**61**
92.257.4004.2	10 pcs	**61**
92.257.4004.7	10 pcs	**61**
92.257.4004.9	10 pcs	**61**
92.257.4010.1	10 pcs	**57**
92.257.4014.1	10 pcs	**61**
92.257.4050.0	10 pcs	**58**
92.257.4050.1	10 pcs	**58**
92.257.4050.2	10 pcs	**58**
92.257.4050.7	10 pcs	**58**
92.257.4050.8	10 pcs	**58**
92.257.4050.9	10 pcs	**58**
92.257.4053.0	10 pcs	**59**
92.257.4053.1	10 pcs	**59**
92.257.4053.2	10 pcs	**59**
92.257.4053.7	10 pcs	**59**
92.257.4053.8	10 pcs	**59**
92.257.4053.9	10 pcs	**59**
92.257.4054.0	10 pcs	**62**
92.257.4054.1	10 pcs	**62**
92.257.4054.2	10 pcs	**62**
92.257.4054.7	10 pcs	**62**
92.257.4054.8	10 pcs	**62**
92.257.4054.9	10 pcs	**62**
92.257.4060.0	10 pcs	**58**
92.257.4060.1	10 pcs	**58**
92.257.4060.2	10 pcs	**58**
92.257.4060.7	10 pcs	**58**
92.257.4060.8	10 pcs	**58**
92.257.4060.9	10 pcs	**58**
92.257.4063.0	10 pcs	**60**
92.257.4063.1	10 pcs	**60**
92.257.4063.2	10 pcs	**60**
92.257.4063.7	10 pcs	**60**
92.257.4063.8	10 pcs	**60**
92.257.4063.9	10 pcs	**60**
92.257.4064.0	10 pcs	**62**
92.257.4064.1	10 pcs	**62**
92.257.4064.2	10 pcs	**62**
92.257.4064.7	10 pcs	**62**
92.257.4064.8	10 pcs	**62**
92.257.4064.9	10 pcs	**62**
92.257.4070.0	10 pcs	**57**
92.257.4070.1	10 pcs	**57**
92.257.4070.2	10 pcs	**57**
92.257.4070.7	10 pcs	**57**
92.257.4070.8	10 pcs	**57**
92.257.4070.9	10 pcs	**57**
92.257.4073.0	10 pcs	**59**
92.257.4073.1	10 pcs	**59**
92.257.4073.2	10 pcs	**59**
92.257.4073.7	10 pcs	**59**
92.257.4073.8	10 pcs	**59**
92.257.4073.9	10 pcs	**59**
92.257.4074.0	10 pcs	**61**
92.257.4074.1	10 pcs	**61**
92.257.4074.2	10 pcs	**61**
92.257.4074.7	10 pcs	**61**
92.257.4074.8	10 pcs	**61**
92.257.4074.9	10 pcs	**61**
92.257.5000.0	10 pcs	**57**
92.257.5000.1	10 pcs	**57**
92.257.5000.2	10 pcs	**57**
92.257.5000.7	10 pcs	**57**
92.257.5000.8	10 pcs	**57**
92.257.5000.9	10 pcs	**57**
92.257.5003.0	10 pcs	**59**
92.257.5003.1	10 pcs	**59**
92.257.5003.2	8 pcs	**59**
92.257.5003.7	10 pcs	**59**
92.257.5003.9	10 pcs	**59**
92.257.5004.0	10 pcs	**61**
92.257.5004.1	10 pcs	**61**
92.257.5004.2	10 pcs	**61**
92.257.5004.7	10 pcs	**61**
92.257.5004.9	10 pcs	**61**
92.257.5010.1	10 pcs	**57**
92.257.5014.1	10 pcs	**61**
92.257.5050.0	10 pcs	**58**
92.257.5050.1	10 pcs	**58**
92.257.5050.2	10 pcs	**58**
92.257.5050.7	10 pcs	**58**
92.257.5050.8	10 pcs	**58**
92.257.5050.9	10 pcs	**58**
92.257.5053.0	10 pcs	**59**
92.257.5053.1	10 pcs	**59**
92.257.5053.2	10 pcs	**59**
92.257.5053.7	10 pcs	**59**
92.257.5053.8	10 pcs	**59**
92.257.5053.9	10 pcs	**59**
92.257.5054.0	10 pcs	**62**
92.257.5054.1	10 pcs	**62**
92.257.5054.2	10 pcs	**62**
92.257.5054.7	10 pcs	**62**
92.257.5054.8	10 pcs	**62**
92.257.5054.9	10 pcs	**62**
92.257.5060.0	10 pcs	**58**
92.257.5060.1	10 pcs	**58**
92.257.5060.2	10 pcs	**58**
92.257.5060.7	10 pcs	**58**
92.257.5060.8	10 pcs	**58**
92.257.5060.9	10 pcs	**58**
92.257.5063.0	10 pcs	**60**
92.257.5063.1	10 pcs	**60**
92.257.5063.2	10 pcs	**60**
92.257.5063.7	10 pcs	**60**
92.257.5063.8	10 pcs	**60**
92.257.5063.9	10 pcs	**60**
92.257.5064.0	10 pcs	**62**
92.257.5064.1	10 pcs	**62**
92.257.5064.2	10 pcs	**62**
92.257.5064.7	10 pcs	**62**
92.257.5064.8	10 pcs	**62**
92.257.5064.9	10 pcs	**62**
92.257.5070.0	10 pcs	**57**
92.257.5070.1	10 pcs	**57**
92.257.5070.2	10 pcs	**57**
92.257.5070.7	10 pcs	**57**
92.257.5070.8	10 pcs	**57**
92.257.5070.9	10 pcs	**57**
92.257.5073.0	10 pcs	**59**
92.257.5073.1	10 pcs	**59**
92.257.5073.2	10 pcs	**59**
92.257.5073.7	10 pcs	**59**
92.257.5073.8	10 pcs	**59**
92.257.5073.9	10 pcs	**59**
92.257.5074.0	10 pcs	**61**
92.257.5074.1	10 pcs	**61**
92.257.5074.2	10 pcs	**61**
92.257.5074.7	10 pcs	**61**
92.257.5074.8	10 pcs	**61**
92.257.5074.9	10 pcs	**61**
92.257.6000.0	8 pcs	**57**
92.257.6000.1	8 pcs	**57**
92.257.6000.2	8 pcs	**57**
92.257.6000.7	8 pcs	**57**
92.257.6000.8	8 pcs	**57**
92.257.6000.9	8 pcs	**57**
92.257.6003.0	8 pcs	**59**
92.257.6003.1	8 pcs	**59**
92.257.6003.2	8 pcs	**59**
92.257.6003.7	8 pcs	**59**
92.257.6003.9	8 pcs	**59**
92.257.6004.0	8 pcs	**61**
92.257.6004.1	8 pcs	**61**
92.257.6004.2	8 pcs	**61**
92.257.6004.7	8 pcs	**61**
92.257.6004.9	8 pcs	**61**
92.257.6050.0	8 pcs	**58**
92.257.6050.1	8 pcs	**58**
92.257.6050.2	8 pcs	**58**
92.257.6050.7	8 pcs	**58**
92.257.6050.8	8 pcs	**58**
92.257.6050.9	8 pcs	**58**
92.257.6053.0	8 pcs	**59**
92.257.6053.1	8 pcs	**59**
92.257.6053.2	8 pcs	**59**
92.257.6053.7	8 pcs	**59**
92.257.6053.8	8 pcs	**59**
92.257.6053.9	8 pcs	**59**
92.257.6054.0	8 pcs	**62**
92.257.6054.1	8 pcs	**62**
92.257.6054.2	8 pcs	**62**
92.257.6054.7	8 pcs	**62**
92.257.6054.8	8 pcs	**62**
92.257.6054.9	8 pcs	**62**
92.257.6060.0	8 pcs	**58**
92.257.6060.1	8 pcs	**58**
92.257.6060.2	8 pcs	**58**
92.257.6060.7	8 pcs	**58**
92.257.6060.8	8 pcs	**58**
92.257.6060.9	8 pcs	**58**
92.257.6063.0	8 pcs	**60**
92.257.6063.1	8 pcs	**60**
92.257.6063.2	8 pcs	**60**
92.257.6063.7	8 pcs	**60**
92.257.6063.8	8 pcs	**60**
92.257.6063.9	8 pcs	**60**
92.257.6064.0	8 pcs	**62**
92.257.6064.1	8 pcs	**62**
92.257.6064.2	8 pcs	**62**
92.257.6064.7	8 pcs	**62**
92.257.6064.8	8 pcs	**62**
92.257.6064.9	8 pcs	**62**
92.257.6070.0	8 pcs	**57**
92.257.6070.1	8 pcs	**57**
92.257.6070.2	8 pcs	**57**
92.257.6070.7	8 pcs	**57**
92.257.6070.8	8 pcs	**57**
92.257.6070.9	8 pcs	**57**
92.257.6073.0	8 pcs	**59**
92.257.6073.1	8 pcs	**59**
92.257.6073.2	8 pcs	**59**
92.257.6073.7	8 pcs	**59**
92.257.6073.8	8 pcs	**59**
92.257.6073.9	8 pcs	**59**
92.257.6074.0	8 pcs	**61**
92.257.6074.1	8 pcs	**61**
92.257.6074.2	8 pcs	**61**
92.257.6074.7	8 pcs	**61**
92.257.6074.8	8 pcs	**61**
92.257.6074.9	8 pcs	**61**
92.257.7000.0	5 pcs	**57**
92.257.7000.1	5 pcs	**57**
92.257.7000.2	5 pcs	**57**
92.257.7000.7	5 pcs	**57**

INDEX

PART NUMBER | PU | PAGE

92.257.7000.8	5 pcs	**57**
92.257.7000.9	5 pcs	**57**
92.257.7003.0	5 pcs	**59**
92.257.7003.1	5 pcs	**59**
92.257.7003.2	5 pcs	**59**
92.257.7003.7	5 pcs	**59**
92.257.7003.9	5 pcs	**59**
92.257.7004.0	5 pcs	**61**
92.257.7004.1	5 pcs	**61**
92.257.7004.2	5 pcs	**61**
92.257.7004.7	5 pcs	**61**
92.257.7004.9	5 pcs	**61**
92.257.7050.0	5 pcs	**58**
92.257.7050.1	5 pcs	**58**
92.257.7050.2	5 pcs	**58**
92.257.7050.7	5 pcs	**58**
92.257.7050.8	5 pcs	**58**
92.257.7050.9	5 pcs	**58**
92.257.7053.0	5 pcs	**59**
92.257.7053.1	5 pcs	**59**
92.257.7053.2	5 pcs	**59**
92.257.7053.7	5 pcs	**59**
92.257.7053.8	5 pcs	**59**
92.257.7053.9	5 pcs	**59**
92.257.7054.0	5 pcs	**62**
92.257.7054.2	5 pcs	**62**
92.257.7054.7	5 pcs	**62**
92.257.7054.8	5 pcs	**62**
92.257.7054.9	5 pcs	**62**
92.257.7060.0	5 pcs	**58**
92.257.7060.1	5 pcs	**58**
92.257.7060.2	5 pcs	**58**
92.257.7060.7	5 pcs	**58**
92.257.7060.8	5 pcs	**58**
92.257.7060.9	5 pcs	**58**
92.257.7063.0	5 pcs	**60**
92.257.7063.1	5 pcs	**60**
92.257.7063.2	5 pcs	**60**
92.257.7063.7	5 pcs	**60**
92.257.7063.8	5 pcs	**60**
92.257.7063.9	5 pcs	**60**
92.257.7064.0	5 pcs	**62**
92.257.7064.2	5 pcs	**62**
92.257.7064.7	5 pcs	**62**
92.257.7064.8	5 pcs	**62**
92.257.7064.9	5 pcs	**62**
92.257.7070.0	5 pcs	**57**
92.257.7070.1	5 pcs	**57**
92.257.7070.2	5 pcs	**57**
92.257.7070.7	5 pcs	**57**
92.257.7070.8	5 pcs	**57**
92.257.7070.9	5 pcs	**57**
92.257.7073.0	5 pcs	**59**
92.257.7073.1	5 pcs	**59**
92.257.7073.2	5 pcs	**59**
92.257.7073.7	5 pcs	**59**
92.257.7073.8	5 pcs	**59**
92.257.7073.9	5 pcs	**59**
92.257.7074.0	5 pcs	**61**
92.257.7074.2	5 pcs	**61**
92.257.7074.7	5 pcs	**61**
92.257.7074.8	5 pcs	**61**
92.257.7074.9	5 pcs	**61**
92.257.8000.0	5 pcs	**57**
92.257.8000.1	5 pcs	**57**
92.257.8000.2	5 pcs	**57**
92.257.8000.7	5 pcs	**57**
92.257.8000.8	5 pcs	**57**
92.257.8000.9	5 pcs	**57**
92.257.8003.0	5 pcs	**59**
92.257.8003.1	5 pcs	**59**
92.257.8003.2	5 pcs	**59**
92.257.8003.7	5 pcs	**59**
92.257.8003.9	5 pcs	**59**
92.257.8004.0	5 pcs	**61**
92.257.8004.1	5 pcs	**61**
92.257.8004.2	5 pcs	**61**
92.257.8004.7	5 pcs	**61**
92.257.8004.9	5 pcs	**61**
92.257.8050.0	5 pcs	**58**
92.257.8050.1	5 pcs	**58**
92.257.8050.2	5 pcs	**58**
92.257.8050.7	5 pcs	**58**
92.257.8050.8	5 pcs	**58**
92.257.8050.9	5 pcs	**58**
92.257.8053.0	5 pcs	**59**
92.257.8053.1	5 pcs	**59**
92.257.8053.2	5 pcs	**59**
92.257.8053.7	5 pcs	**59**
92.257.8053.8	5 pcs	**59**
92.257.8053.9	5 pcs	**59**
92.257.8054.0	5 pcs	**62**
92.257.8054.1	5 pcs	**62**
92.257.8054.2	5 pcs	**62**
92.257.8054.7	5 pcs	**62**
92.257.8054.8	5 pcs	**62**
92.257.8054.9	5 pcs	**62**
92.257.8060.0	5 pcs	**58**
92.257.8060.1	5 pcs	**58**
92.257.8060.2	5 pcs	**58**
92.257.8060.7	5 pcs	**58**
92.257.8060.8	5 pcs	**58**
92.257.8060.9	5 pcs	**58**
92.257.8063.0	5 pcs	**60**
92.257.8063.1	5 pcs	**60**
92.257.8063.2	5 pcs	**60**
92.257.8063.7	5 pcs	**60**
92.257.8063.8	5 pcs	**60**
92.257.8063.9	5 pcs	**60**
92.257.8064.0	5 pcs	**62**
92.257.8064.1	5 pcs	**62**
92.257.8064.2	5 pcs	**62**
92.257.8064.7	5 pcs	**62**
92.257.8064.8	5 pcs	**62**
92.257.8064.9	5 pcs	**62**
92.257.8070.0	5 pcs	**57**
92.257.8070.1	5 pcs	**57**
92.257.8070.2	5 pcs	**57**
92.257.8070.7	5 pcs	**57**
92.257.8070.8	5 pcs	**57**
92.257.8070.9	5 pcs	**57**
92.257.8073.0	5 pcs	**59**
92.257.8073.1	5 pcs	**59**
92.257.8073.2	5 pcs	**59**
92.257.8073.7	5 pcs	**59**
92.257.8073.8	5 pcs	**59**
92.257.8073.9	5 pcs	**59**
92.257.8074.0	5 pcs	**61**
92.257.8074.1	5 pcs	**61**
92.257.8074.2	5 pcs	**61**
92.257.8074.7	5 pcs	**61**
92.257.8074.8	5 pcs	**61**
92.257.8074.9	5 pcs	**61**
92.258.1000.1	30 pcs	**64**
92.258.1000.2	30 pcs	**64**
92.258.1000.9	30 pcs	**64**
92.258.1003.1	30 pcs	**66**
92.258.1003.2	30 pcs	**66**
92.258.1003.9	30 pcs	**66**
92.258.1004.1	30 pcs	**67**
92.258.1004.2	30 pcs	**67**
92.258.1004.9	30 pcs	**67**
92.258.1050.1	30 pcs	**64**
92.258.1050.2	30 pcs	**64**
92.258.1050.9	30 pcs	**64**
92.258.1053.1	30 pcs	**66**
92.258.1053.2	30 pcs	**66**
92.258.1053.9	30 pcs	**66**
92.258.1054.1	30 pcs	**67**
92.258.1054.2	30 pcs	**67**
92.258.1054.9	30 pcs	**67**
92.258.1060.1	30 pcs	**65**
92.258.1060.2	30 pcs	**65**
92.258.1060.9	30 pcs	**65**
92.258.1063.1	30 pcs	**66**
92.258.1063.2	30 pcs	**66**
92.258.1063.9	30 pcs	**66**
92.258.1064.1	30 pcs	**67**
92.258.1064.2	30 pcs	**67**
92.258.1064.9	30 pcs	**67**
92.258.1070.1	30 pcs	**64**
92.258.1070.2	30 pcs	**64**
92.258.1070.9	30 pcs	**64**
92.258.1073.1	30 pcs	**66**
92.258.1073.2	30 pcs	**66**
92.258.1073.9	30 pcs	**66**
92.258.1074.1	30 pcs	**67**
92.258.1074.2	30 pcs	**67**
92.258.1074.9	30 pcs	**67**
92.258.2000.1	20 pcs	**64**
92.258.2000.2	20 pcs	**64**
92.258.2000.9	20 pcs	**64**
92.258.2003.1	20 pcs	**66**
92.258.2003.2	20 pcs	**66**
92.258.2003.9	20 pcs	**66**
92.258.2004.1	20 pcs	**67**
92.258.2004.2	20 pcs	**67**
92.258.2004.9	20 pcs	**67**
92.258.2050.1	15 pcs	**64**
92.258.2050.2	15 pcs	**64**
92.258.2050.3	15 pcs	**64**
92.258.2050.9	15 pcs	**64**
92.258.2053.1	15 pcs	**66**
92.258.2053.2	20 pcs	**66**
92.258.2053.9	15 pcs	**66**
92.258.2054.1	15 pcs	**67**
92.258.2054.2	20 pcs	**67**
92.258.2054.9	15 pcs	**67**
92.258.2060.1	15 pcs	**65**
92.258.2060.2	15 pcs	**65**
92.258.2060.3	15 pcs	**65**
92.258.2060.9	15 pcs	**65**
92.258.2063.1	15 pcs	**66**
92.258.2063.2	20 pcs	**66**
92.258.2063.9	15 pcs	**66**
92.258.2064.1	15 pcs	**67**
92.258.2064.2	20 pcs	**67**
92.258.2064.9	15 pcs	**67**
92.258.2070.1	15 pcs	**64**
92.258.2070.2	15 pcs	**64**
92.258.2070.3	15 pcs	**64**
92.258.2070.9	15 pcs	**64**
92.258.2073.1	15 pcs	**66**
92.258.2073.2	20 pcs	**66**
92.258.2073.9	15 pcs	**66**
92.258.2074.1	15 pcs	**67**
92.258.2074.2	20 pcs	**67**
92.258.2074.9	15 pcs	**67**
92.258.3000.1	10 pcs	**64**
92.258.3000.2	10 pcs	**64**
92.258.3000.9	10 pcs	**64**
92.258.3003.1	15 pcs	**66**
92.258.3003.2	15 pcs	**66**
92.258.3003.9	15 pcs	**66**
92.258.3004.1	15 pcs	**67**
92.258.3004.2	15 pcs	**67**
92.258.3004.9	15 pcs	**67**
92.258.3050.1	10 pcs	**64**
92.258.3050.2	10 pcs	**64**
92.258.3050.3	10 pcs	**64**
92.258.3050.9	10 pcs	**64**
92.258.3053.1	15 pcs	**66**
92.258.3053.2	15 pcs	**66**
92.258.3053.9	10 pcs	**66**
92.258.3054.1	15 pcs	**67**
92.258.3054.2	15 pcs	**67**
92.258.3054.9	10 pcs	**67**
92.258.3060.1	10 pcs	**65**
92.258.3060.2	10 pcs	**65**
92.258.3060.3	10 pcs	**65**
92.258.3060.9	10 pcs	**65**
92.258.3063.1	15 pcs	**66**
92.258.3063.2	15 pcs	**66**
92.258.3063.9	10 pcs	**66**
92.258.3064.1	15 pcs	**67**
92.258.3064.2	15 pcs	**67**
92.258.3064.9	10 pcs	**67**
92.258.3070.1	10 pcs	**64**
92.258.3070.2	10 pcs	**64**
92.258.3070.3	10 pcs	**64**
92.258.3070.9	10 pcs	**64**
92.258.3073.1	15 pcs	**66**
92.258.3073.2	15 pcs	**66**
92.258.3073.9	10 pcs	**66**
92.258.3074.1	15 pcs	**67**
92.258.3074.2	15 pcs	**67**
92.258.3074.9	10 pcs	**67**
92.258.4000.1	10 pcs	**64**
92.258.4000.2	10 pcs	**64**
92.258.4000.9	10 pcs	**64**
92.258.4003.1	10 pcs	**66**
92.258.4003.2	10 pcs	**66**
92.258.4003.9	10 pcs	**66**
92.258.4004.1	10 pcs	**67**
92.258.4004.2	10 pcs	**67**
92.258.4004.9	10 pcs	**67**
92.258.4050.1	10 pcs	**64**
92.258.4050.2	10 pcs	**64**
92.258.4050.3	10 pcs	**64**
92.258.4050.9	10 pcs	**64**
92.258.4053.1	10 pcs	**66**
92.258.4053.2	10 pcs	**66**
92.258.4053.9	10 pcs	**66**
92.258.4054.1	10 pcs	**67**
92.258.4054.2	10 pcs	**67**
92.258.4054.9	10 pcs	**67**
92.258.4060.1	10 pcs	**65**
92.258.4060.2	10 pcs	**65**
92.258.4060.3	10 pcs	**65**
92.258.4060.9	10 pcs	**65**
92.258.4063.1	10 pcs	**66**
92.258.4063.2	10 pcs	**66**
92.258.4063.9	10 pcs	**66**
92.258.4064.1	10 pcs	**67**
92.258.4064.2	10 pcs	**67**
92.258.4064.9	10 pcs	**67**
92.258.4070.1	10 pcs	**64**
92.258.4070.2	10 pcs	**64**
92.258.4070.3	10 pcs	**64**
92.258.4070.9	10 pcs	**64**

INDEX

PART NUMBER | PU | PAGE

92.258.4073.1	10 pcs	**66**
92.258.4073.2	10 pcs	**66**
92.258.4073.9	10 pcs	**66**
92.258.4074.1	10 pcs	**67**
92.258.4074.2	10 pcs	**67**
92.258.4074.9	10 pcs	**67**
92.258.5000.1	8 pcs	**64**
92.258.5000.2	8 pcs	**64**
92.258.5000.9	8 pcs	**64**
92.258.5003.1	8 pcs	**66**
92.258.5003.2	8 pcs	**66**
92.258.5003.9	8 pcs	**66**
92.258.5004.1	8 pcs	**67**
92.258.5004.2	8 pcs	**67**
92.258.5004.9	8 pcs	**67**
92.258.5050.1	8 pcs	**64**
92.258.5050.2	8 pcs	**64**
92.258.5050.9	8 pcs	**64**
92.258.5053.1	8 pcs	**66**
92.258.5053.2	8 pcs	**66**
92.258.5053.9	8 pcs	**66**
92.258.5054.1	8 pcs	**67**
92.258.5054.2	8 pcs	**67**
92.258.5054.9	8 pcs	**67**
92.258.5060.1	8 pcs	**65**
92.258.5060.2	8 pcs	**65**
92.258.5060.9	8 pcs	**65**
92.258.5063.1	8 pcs	**66**
92.258.5063.2	8 pcs	**66**
92.258.5063.9	8 pcs	**66**
92.258.5064.1	8 pcs	**67**
92.258.5064.2	8 pcs	**67**
92.258.5064.9	8 pcs	**67**
92.258.5070.1	8 pcs	**64**
92.258.5070.2	8 pcs	**64**
92.258.5070.9	8 pcs	**64**
92.258.5073.1	8 pcs	**66**
92.258.5073.2	8 pcs	**66**
92.258.5073.9	8 pcs	**66**
92.258.5074.1	8 pcs	**67**
92.258.5074.2	8 pcs	**67**
92.258.5074.9	8 pcs	**67**
92.258.6000.1	5 pcs	**64**
92.258.6000.2	5 pcs	**64**
92.258.6000.9	5 pcs	**64**
92.258.6003.1	5 pcs	**66**
92.258.6003.2	5 pcs	**66**
92.258.6003.9	5 pcs	**66**
92.258.6004.1	5 pcs	**67**
92.258.6004.2	5 pcs	**67**
92.258.6004.9	5 pcs	**67**
92.258.6050.1	5 pcs	**64**
92.258.6050.2	5 pcs	**64**
92.258.6050.3	5 pcs	**64**
92.258.6050.9	5 pcs	**64**
92.258.6053.1	5 pcs	**66**
92.258.6053.2	5 pcs	**66**
92.258.6053.9	5 pcs	**66**
92.258.6054.1	5 pcs	**67**
92.258.6054.2	5 pcs	**67**
92.258.6054.9	5 pcs	**67**
92.258.6060.1	5 pcs	**65**
92.258.6060.2	5 pcs	**65**
92.258.6060.3	5 pcs	**65**
92.258.6060.9	5 pcs	**65**
92.258.6063.1	5 pcs	**66**
92.258.6063.2	5 pcs	**66**
92.258.6063.9	5 pcs	**66**
92.258.6064.1	5 pcs	**67**
92.258.6064.2	5 pcs	**67**
92.258.6064.9	5 pcs	**67**
92.258.6070.1	5 pcs	**64**
92.258.6070.2	5 pcs	**64**
92.258.6070.3	5 pcs	**64**
92.258.6070.9	5 pcs	**64**
92.258.6073.1	5 pcs	**66**
92.258.6073.2	5 pcs	**66**
92.258.6073.9	5 pcs	**66**
92.258.6074.1	5 pcs	**67**
92.258.6074.2	5 pcs	**67**
92.258.6074.9	5 pcs	**67**
92.258.7000.1	5 pcs	**64**
92.258.7000.2	5 pcs	**64**
92.258.7000.9	5 pcs	**64**
92.258.7003.1	5 pcs	**66**
92.258.7003.2	5 pcs	**66**
92.258.7003.9	5 pcs	**66**
92.258.7004.1	5 pcs	**67**
92.258.7004.2	5 pcs	**67**
92.258.7004.9	5 pcs	**67**
92.258.7050.1	5 pcs	**64**
92.258.7050.2	5 pcs	**64**
92.258.7050.9	5 pcs	**64**
92.258.7053.1	5 pcs	**66**
92.258.7053.2	5 pcs	**66**
92.258.7053.9	5 pcs	**66**
92.258.7054.1	5 pcs	**67**
92.258.7054.2	5 pcs	**67**
92.258.7054.9	5 pcs	**67**
92.258.7060.1	5 pcs	**65**
92.258.7060.2	5 pcs	**65**
92.258.7060.9	5 pcs	**65**
92.258.7063.1	5 pcs	**66**
92.258.7063.2	5 pcs	**66**
92.258.7063.9	5 pcs	**66**
92.258.7064.1	5 pcs	**67**
92.258.7064.2	5 pcs	**67**
92.258.7064.9	5 pcs	**67**
92.258.7070.1	5 pcs	**64**
92.258.7070.2	5 pcs	**64**
92.258.7070.9	5 pcs	**64**
92.258.7073.1	5 pcs	**66**
92.258.7073.2	5 pcs	**66**
92.258.7073.9	5 pcs	**66**
92.258.7074.1	5 pcs	**67**
92.258.7074.2	5 pcs	**67**
92.258.7074.9	5 pcs	**67**
92.258.8000.1	4 pcs	**64**
92.258.8000.2	4 pcs	**64**
92.258.8000.9	4 pcs	**64**
92.258.8003.1	5 pcs	**66**
92.258.8003.2	5 pcs	**66**
92.258.8003.9	5 pcs	**66**
92.258.8004.1	5 pcs	**67**
92.258.8004.2	5 pcs	**67**
92.258.8004.9	5 pcs	**67**
92.258.8050.1	4 pcs	**64**
92.258.8050.2	4 pcs	**64**
92.258.8050.3	4 pcs	**64**
92.258.8050.9	4 pcs	**64**
92.258.8053.1	5 pcs	**66**
92.258.8053.2	4 pcs	**66**
92.258.8053.9	4 pcs	**66**
92.258.8054.1	5 pcs	**67**
92.258.8054.2	4 pcs	**67**
92.258.8054.9	5 pcs	**67**
92.258.8060.1	4 pcs	**65**
92.258.8060.2	4 pcs	**65**
92.258.8060.3	4 pcs	**65**
92.258.8060.9	4 pcs	**65**
92.258.8063.1	5 pcs	**66**
92.258.8063.2	4 pcs	**66**
92.258.8063.9	4 pcs	**66**
92.258.8064.1	5 pcs	**67**
92.258.8064.2	4 pcs	**67**
92.258.8064.9	5 pcs	**67**
92.258.8070.1	4 pcs	**64**
92.258.8070.2	4 pcs	**64**
92.258.8070.3	4 pcs	**64**
92.258.8070.9	4 pcs	**64**
92.258.8073.1	5 pcs	**66**
92.258.8073.2	4 pcs	**66**
92.258.8073.9	4 pcs	**66**
92.258.8074.1	5 pcs	**67**
92.258.8074.2	4 pcs	**67**
92.258.8074.9	5 pcs	**67**
92.267.1060.1	40 pcs	**71**
92.267.1063.1	40 pcs	**71**
92.267.1064.1	40 pcs	**72**
92.267.2060.1	25 pcs	**71**
92.267.2063.1	25 pcs	**71**
92.267.2064.1	25 pcs	**72**
92.267.3060.1	15 pcs	**71**
92.267.3063.1	15 pcs	**71**
92.267.3064.1	15 pcs	**72**
92.267.4060.1	10 pcs	**71**
92.267.4063.1	10 pcs	**71**
92.267.4064.1	10 pcs	**72**
92.267.5060.1	10 pcs	**71**
92.267.5063.1	10 pcs	**71**
92.267.5064.1	10 pcs	**72**
92.267.6060.1	5 pcs	**71**
92.267.6063.1	5 pcs	**71**
92.267.6064.1	5 pcs	**72**
92.267.7060.1	5 pcs	**71**
92.267.7063.1	5 pcs	**71**
92.267.7064.1	5 pcs	**72**
92.267.8060.1	5 pcs	**71**
92.267.8063.1	5 pcs	**71**
92.267.8064.1	5 pcs	**72**
92.297.1000.0	50 pcs	**19**
92.297.1000.7	50 pcs	**19**
92.297.1003.0	50 pcs	**21**
92.297.1003.7	50 pcs	**21**
92.297.1004.0	50 pcs	**23**
92.297.1004.7	50 pcs	**23**
92.297.1050.0	50 pcs	**20**
92.297.1050.7	50 pcs	**20**
92.297.1053.0	50 pcs	**22**
92.297.1053.7	50 pcs	**22**
92.297.1054.0	50 pcs	**24**
92.297.1054.7	50 pcs	**24**
92.297.1060.0	50 pcs	**20**
92.297.1060.7	50 pcs	**20**
92.297.1063.0	50 pcs	**22**
92.297.1063.7	50 pcs	**22**
92.297.1064.0	50 pcs	**24**
92.297.1064.7	50 pcs	**24**
92.297.1070.0	50 pcs	**20**
92.297.1070.7	50 pcs	**20**
92.297.1073.0	50 pcs	**22**
92.297.1073.7	50 pcs	**22**
92.297.1074.0	50 pcs	**24**
92.297.1074.7	50 pcs	**24**
92.297.2000.0	30 pcs	**19**
92.297.2000.7	30 pcs	**19**
92.297.2003.0	30 pcs	**21**
92.297.2003.7	30 pcs	**21**
92.297.2004.0	30 pcs	**23**
92.297.2004.7	30 pcs	**23**
92.297.2050.0	30 pcs	**20**
92.297.2050.7	30 pcs	**20**
92.297.2053.0	30 pcs	**22**
92.297.2053.7	30 pcs	**22**
92.297.2054.0	30 pcs	**24**
92.297.2054.7	30 pcs	**24**
92.297.2060.0	30 pcs	**20**
92.297.2060.7	30 pcs	**20**
92.297.2063.0	30 pcs	**22**
92.297.2063.7	30 pcs	**22**
92.297.2064.0	30 pcs	**24**
92.297.2064.7	30 pcs	**24**
92.297.2070.0	30 pcs	**20**
92.297.2070.7	30 pcs	**20**
92.297.2073.0	30 pcs	**22**
92.297.2073.7	30 pcs	**22**
92.297.2074.0	30 pcs	**24**
92.297.2074.7	30 pcs	**24**
92.297.3000.0	25 pcs	**19**
92.297.3000.7	25 pcs	**19**
92.297.3003.0	25 pcs	**21**
92.297.3003.7	25 pcs	**21**
92.297.3004.0	25 pcs	**23**
92.297.3004.7	25 pcs	**23**
92.297.3050.0	25 pcs	**20**
92.297.3050.7	25 pcs	**20**
92.297.3053.0	25 pcs	**22**
92.297.3053.7	25 pcs	**22**
92.297.3054.0	25 pcs	**24**
92.297.3054.7	25 pcs	**24**
92.297.3060.0	25 pcs	**20**
92.297.3060.7	25 pcs	**20**
92.297.3063.0	25 pcs	**22**
92.297.3063.7	25 pcs	**22**
92.297.3064.0	25 pcs	**24**
92.297.3064.7	25 pcs	**24**
92.297.3070.0	25 pcs	**20**
92.297.3070.7	25 pcs	**20**
92.297.3073.0	25 pcs	**22**
92.297.3073.7	25 pcs	**22**
92.297.3074.0	25 pcs	**24**
92.297.3074.7	25 pcs	**24**
92.297.4000.0	20 pcs	**19**
92.297.4000.7	20 pcs	**19**
92.297.4003.0	20 pcs	**21**
92.297.4003.7	20 pcs	**21**
92.297.4004.0	20 pcs	**23**
92.297.4004.7	20 pcs	**23**
92.297.4050.0	20 pcs	**20**
92.297.4050.7	20 pcs	**20**
92.297.4053.0	20 pcs	**22**
92.297.4053.7	20 pcs	**22**
92.297.4054.0	20 pcs	**24**
92.297.4054.7	20 pcs	**24**
92.297.4060.0	20 pcs	**20**
92.297.4060.7	20 pcs	**20**
92.297.4063.0	20 pcs	**22**
92.297.4063.7	20 pcs	**22**
92.297.4064.0	20 pcs	**24**
92.297.4064.7	20 pcs	**24**
92.297.4070.0	20 pcs	**20**
92.297.4070.7	20 pcs	**20**
92.297.4073.0	20 pcs	**22**
92.297.4073.7	20 pcs	**22**
92.297.4074.0	20 pcs	**24**
92.297.4074.7	20 pcs	**24**
92.297.5000.0	15 pcs	**19**
92.297.5000.7	15 pcs	**19**
92.297.5003.0	15 pcs	**21**
92.297.5003.7	15 pcs	**21**

INDEX

PART NUMBER | PU | PAGE

92.297.5004.0	15 pcs	23
92.297.5004.7	15 pcs	23
92.297.5050.0	15 pcs	20
92.297.5050.7	15 pcs	20
92.297.5053.0	15 pcs	22
92.297.5053.7	15 pcs	22
92.297.5054.0	15 pcs	24
92.297.5054.7	15 pcs	24
92.297.5060.0	15 pcs	20
92.297.5060.7	15 pcs	20
92.297.5063.0	15 pcs	22
92.297.5063.7	15 pcs	22
92.297.5064.0	15 pcs	24
92.297.5064.7	15 pcs	24
92.297.5070.0	15 pcs	20
92.297.5070.7	15 pcs	20
92.297.5073.0	15 pcs	22
92.297.5073.7	15 pcs	22
92.297.5074.0	15 pcs	24
92.297.5074.7	15 pcs	24
92.297.6000.0	15 pcs	19
92.297.6000.7	15 pcs	19
92.297.6003.0	15 pcs	21
92.297.6003.7	15 pcs	21
92.297.6004.0	15 pcs	23
92.297.6004.7	15 pcs	23
92.297.6050.0	15 pcs	20
92.297.6050.7	15 pcs	20
92.297.6053.0	15 pcs	22
92.297.6053.7	15 pcs	22
92.297.6054.0	15 pcs	24
92.297.6054.7	15 pcs	24
92.297.6060.0	15 pcs	20
92.297.6060.7	15 pcs	20
92.297.6063.0	15 pcs	22
92.297.6063.7	15 pcs	22
92.297.6064.0	15 pcs	24
92.297.6064.7	15 pcs	24
92.297.6070.0	15 pcs	20
92.297.6070.7	15 pcs	20
92.297.6073.0	15 pcs	22
92.297.6073.7	15 pcs	22
92.297.6074.0	15 pcs	24
92.297.6074.7	15 pcs	24
92.297.7000.0	10 pcs	19
92.297.7000.7	10 pcs	19
92.297.7003.0	10 pcs	21
92.297.7003.7	10 pcs	21
92.297.7004.0	10 pcs	23
92.297.7004.7	10 pcs	23
92.297.7050.0	10 pcs	20
92.297.7050.7	10 pcs	20
92.297.7053.0	10 pcs	22
92.297.7053.7	10 pcs	22
92.297.7054.0	10 pcs	24
92.297.7054.7	10 pcs	24
92.297.7060.0	10 pcs	20
92.297.7060.7	10 pcs	20
92.297.7063.0	10 pcs	22
92.297.7063.7	10 pcs	22
92.297.7064.0	10 pcs	24
92.297.7064.7	10 pcs	24
92.297.7070.0	10 pcs	20
92.297.7070.7	10 pcs	20
92.297.7073.0	10 pcs	22
92.297.7073.7	10 pcs	22
92.297.7074.0	10 pcs	24
92.297.7074.7	10 pcs	24
92.297.8000.0	10 pcs	19
92.297.8000.7	10 pcs	19
92.297.8003.0	10 pcs	21
92.297.8003.7	10 pcs	21
92.297.8004.0	10 pcs	23
92.297.8004.7	10 pcs	23
92.297.8050.0	10 pcs	20
92.297.8050.7	10 pcs	20
92.297.8053.0	10 pcs	22
92.297.8053.7	10 pcs	22
92.297.8054.0	10 pcs	24
92.297.8054.7	10 pcs	24
92.297.8060.0	10 pcs	20
92.297.8060.7	10 pcs	20
92.297.8063.0	10 pcs	22
92.297.8063.7	10 pcs	22
92.297.8064.0	10 pcs	24
92.297.8064.7	10 pcs	24
92.297.8070.0	10 pcs	20
92.297.8070.7	10 pcs	20
92.297.8073.0	10 pcs	22
92.297.8073.7	10 pcs	22
92.297.8074.0	10 pcs	24
92.297.8074.7	10 pcs	24
92.298.1050.7	50 pcs	27
92.298.1053.7	50 pcs	29
92.298.1054.7	50 pcs	31
92.298.1060.7	50 pcs	27
92.298.1063.7	50 pcs	29
92.298.1064.7	50 pcs	31
92.298.1070.7	50 pcs	27
92.298.1073.7	50 pcs	29
92.298.1074.7	50 pcs	31
92.298.2050.7	25 pcs	27
92.298.2053.7	25 pcs	29
92.298.2054.7	25 pcs	31
92.298.2060.7	25 pcs	27
92.298.2063.7	25 pcs	29
92.298.2064.7	25 pcs	31
92.298.2070.7	25 pcs	27
92.298.2073.7	25 pcs	29
92.298.2074.7	25 pcs	31
92.298.3050.7	20 pcs	27
92.298.3053.7	20 pcs	29
92.298.3054.7	20 pcs	31
92.298.3060.7	20 pcs	27
92.298.3063.7	20 pcs	29
92.298.3064.7	20 pcs	31
92.298.3070.7	20 pcs	27
92.298.3073.7	20 pcs	29
92.298.3074.7	20 pcs	31
92.298.4050.0	15 pcs	27
92.298.4050.7	15 pcs	27
92.298.4053.7	15 pcs	29
92.298.4054.7	15 pcs	31
92.298.4060.0	15 pcs	27
92.298.4060.7	15 pcs	27
92.298.4063.7	15 pcs	29
92.298.4064.7	15 pcs	31
92.298.4070.0	15 pcs	27
92.298.4070.7	15 pcs	27
92.298.4073.7	15 pcs	29
92.298.4074.7	15 pcs	31
92.298.5050.7	10 pcs	27
92.298.5053.7	10 pcs	29
92.298.5054.7	10 pcs	31
92.298.5060.7	10 pcs	27
92.298.5063.7	10 pcs	29
92.298.5064.7	10 pcs	31
92.298.5070.7	10 pcs	27
92.298.5073.7	10 pcs	29
92.298.5074.7	10 pcs	31
92.298.6050.0	10 pcs	27
92.298.6050.7	10 pcs	27
92.298.6053.7	10 pcs	29
92.298.6054.7	10 pcs	31
92.298.6060.7	10 pcs	27
92.298.6063.7	10 pcs	29
92.298.6064.7	10 pcs	31
92.298.6070.0	10 pcs	27
92.298.6070.7	10 pcs	27
92.298.6073.7	10 pcs	29
92.298.6074.7	10 pcs	31
92.298.7050.7	5 pcs	27
92.298.7053.7	5 pcs	29
92.298.7054.7	5 pcs	31
92.298.7060.7	5 pcs	27
92.298.7063.7	5 pcs	29
92.298.7064.7	5 pcs	31
92.298.7070.7	5 pcs	27
92.298.7073.7	5 pcs	29
92.298.7074.7	5 pcs	31
92.298.8050.0	5 pcs	27
92.298.8050.7	5 pcs	27
92.298.8053.7	5 pcs	29
92.298.8054.7	5 pcs	31
92.298.8060.7	5 pcs	27
92.298.8063.7	5 pcs	29
92.298.8064.7	5 pcs	31
92.298.8070.0	5 pcs	27
92.298.8070.7	5 pcs	27
92.298.8073.7	5 pcs	29
92.298.8074.7	5 pcs	31
92.299.2000.1	15 pcs	33
92.299.2004.1	15 pcs	33
92.299.2050.1	15 pcs	33
92.299.2054.1	15 pcs	33
92.299.2070.1	15 pcs	33
92.299.2074.1	15 pcs	33
92.299.3004.1	10 pcs	33
92.299.3054.1	10 pcs	33
92.299.3074.1	10 pcs	33
92.299.4000.1	8 pcs	33
92.299.4050.1	8 pcs	33
92.299.4070.1	8 pcs	33
92.299.6000.1	5 pcs	33
92.299.6050.1	5 pcs	33
92.299.6070.1	5 pcs	33
92.299.8000.1	5 pcs	33
92.299.8050.1	5 pcs	33
92.299.8070.1	5 pcs	33
92.357.1060.1	30 pcs	55
92.357.1060.9	30 pcs	55
92.357.1063.1	30 pcs	55
92.357.1064.9	30 pcs	56
92.357.2060.9	20 pcs	55
92.357.2063.1	20 pcs	55
92.357.2063.9	20 pcs	55
92.357.2064.9	20 pcs	56
92.357.3060.1	15 pcs	55
92.357.3060.9	15 pcs	55
92.357.3063.1	15 pcs	55
92.357.3063.9	15 pcs	55
92.357.3064.1	15 pcs	56
92.357.3064.9	15 pcs	56
92.357.4060.1	10 pcs	55
92.357.4060.9	10 pcs	55
92.357.4063.1	10 pcs	55
92.357.4063.9	10 pcs	55
92.357.4064.9	10 pcs	56
92.357.5060.1	10 pcs	55
92.357.5060.9	10 pcs	55
92.357.5063.9	10 pcs	55
92.357.5064.9	10 pcs	56
92.357.6060.1	8 pcs	55
92.357.6060.9	8 pcs	55
92.357.6063.9	8 pcs	55
92.357.6064.9	8 pcs	56
92.357.7060.1	5 pcs	55
92.357.7060.9	5 pcs	55
92.357.7063.1	5 pcs	55
92.357.7063.9	5 pcs	55
92.357.7064.1	5 pcs	56
92.357.7064.9	5 pcs	56
92.357.8060.1	5 pcs	55
92.357.8060.9	5 pcs	55
92.357.8063.9	5 pcs	55
92.357.8064.9	5 pcs	56
92.358.1060.9	30 pcs	63
92.358.1064.9	30 pcs	63
92.358.2060.9	20 pcs	63
92.358.2064.9	20 pcs	63
92.358.3060.9	10 pcs	63
92.358.3064.9	15 pcs	63
92.358.4060.9	10 pcs	63
92.358.4064.9	10 pcs	63
92.358.5060.9	8 pcs	63
92.358.6060.9	5 pcs	63
92.731.6053.0	50 pcs	10
92.931.3053.0	50 pcs	8
92.931.3053.1	50 pcs	8
92.931.3057.0	50 pcs	8
92.931.3453.0	50 pcs	8
92.931.3453.5	50 pcs	8
92.931.3553.0	50 pcs	8
92.931.3653.0	50 pcs	8
92.931.3753.0	50 pcs	8
92.931.3853.0	50 pcs	8
92.931.4053.0	50 pcs	8
92.931.5053.0	50 pcs	8
92.931.5053.1	50 pcs	8
92.931.5353.0	50 pcs	8
92.931.5353.5	50 pcs	8
92.931.5553.0	50 pcs	8
92.931.5653.0	50 pcs	8
92.931.5853.0	50 pcs	8
92.931.6053.0	50 pcs	8
92.932.3053.0	50 pcs	8
92.932.3053.1	50 pcs	8
92.932.3057.0	50 pcs	8
92.932.3453.0	50 pcs	8
92.932.3453.5	50 pcs	8
92.932.3553.0	50 pcs	8
92.932.3653.0	50 pcs	8
92.932.3753.0	50 pcs	8
92.932.3853.0	50 pcs	8
92.932.4053.0	50 pcs	8
92.932.5053.0	50 pcs	8
92.932.5053.1	50 pcs	8
92.932.5353.0	50 pcs	8
92.932.5353.5	50 pcs	8
92.932.5553.0	50 pcs	8
92.932.5653.0	50 pcs	8
92.932.5853.0	50 pcs	8
92.932.6053.0	50 pcs	8
92.933.0053.0	50 pcs	9
92.933.0053.1	50 pcs	9
92.933.0153.0	50 pcs	9
92.933.0153.5	50 pcs	9
92.933.0453.0	50 pcs	9
92.933.0553.0	50 pcs	9
92.933.0653.0	50 pcs	9

INDEX

PART NUMBER | PU | PAGE

92.933.0753.0	50 pcs	**9**
92.934.0053.0	50 pcs	**9**
92.934.0053.1	50 pcs	**9**
92.934.0153.0	50 pcs	**9**
92.934.0153.5	50 pcs	**9**
92.934.0453.0	50 pcs	**9**
92.934.0553.0	50 pcs	**9**
92.934.0653.0	50 pcs	**9**
92.934.0753.0	50 pcs	**9**
92.943.0053.0	50 pcs	**35**
92.943.0053.1	50 pcs	**35**
92.943.0153.0	50 pcs	**35**
92.943.0153.5	50 pcs	**35**
92.943.0353.0	50 pcs	**35**
92.943.0453.0	50 pcs	**35**
92.943.1053.0	50 pcs	**35**
92.943.1053.1	50 pcs	**35**
92.943.3053.0	50 pcs	**34**
92.943.3053.1	50 pcs	**34**
92.943.3057.0	50 pcs	**34**
92.943.3253.0	50 pcs	**34**
92.943.3353.0	50 pcs	**34**
92.943.3553.0	50 pcs	**34**
92.943.3553.5	50 pcs	**34**
92.944.0053.0	50 pcs	**35**
92.944.0053.1	50 pcs	**35**
92.944.0153.0	50 pcs	**35**
92.944.0153.5	50 pcs	**35**
92.944.0353.0	50 pcs	**35**
92.944.0453.0	50 pcs	**35**
92.944.3053.0	50 pcs	**34**
92.944.3053.1	50 pcs	**34**
92.944.3057.0	50 pcs	**34**
92.944.3253.0	50 pcs	**34**
92.944.3353.0	50 pcs	**34**
92.944.3553.0	50 pcs	**34**
92.944.3553.5	50 pcs	**34**
92.953.4053.0	50 pcs	**48**
92.953.4053.1	50 pcs	**48**
92.953.4057.0	50 pcs	**48**
92.953.4153.0	50 pcs	**48**
92.953.4253.0	50 pcs	**48**
92.953.4353.0	50 pcs	**48**
92.953.4453.0	50 pcs	**48**
92.953.4553.0	50 pcs	**48**
92.953.4553.5	50 pcs	**48**
92.953.5053.0	50 pcs	**48**
92.953.5053.1	50 pcs	**48**
92.953.5153.0	50 pcs	**48**
92.953.5253.0	50 pcs	**48**
92.953.5353.0	50 pcs	**48**
92.953.5453.0	50 pcs	**48**
92.953.5553.0	50 pcs	**48**
92.953.5553.5	50 pcs	**48**
92.953.7053.0	50 pcs	**48**
92.953.7053.1	50 pcs	**48**
92.953.7453.0	50 pcs	**48**
92.954.4053.0	50 pcs	**48**
92.954.4053.1	50 pcs	**48**
92.954.4057.0	50 pcs	**48**
92.954.4153.0	50 pcs	**48**
92.954.4253.0	50 pcs	**48**
92.954.4353.0	50 pcs	**48**
92.954.4453.0	50 pcs	**48**
92.954.4553.0	50 pcs	**48**
92.954.4553.5	50 pcs	**48**
92.954.5053.0	50 pcs	**48**
92.954.5053.1	50 pcs	**48**
92.954.5153.0	50 pcs	**48**
92.954.5253.0	50 pcs	**48**
92.954.5353.0	50 pcs	**48**
92.954.5453.0	50 pcs	**48**
92.954.5553.0	50 pcs	**48**
92.954.5553.5	50 pcs	**48**
92.954.7053.0	50 pcs	**48**
92.954.7053.1	50 pcs	**48**
92.954.7453.0	50 pcs	**48**
92.968.0157.0	100 pcs	**68**
92.968.0158.1	100 pcs	**68**
92.968.0358.1	50 pcs	**68**
92.969.0157.0	100 pcs	**68**
92.969.0158.1	100 pcs	**68**
92.969.0358.1	50 pcs	**68**
93.053.6009.0	1 pc	**77**
93.053.6010.0	1 pc	**77**
93.053.7006.0	1 pc	**77**
93.053.7007.0	1 pc	**77**
93.420.0053.0	50 pcs	**134**
93.420.0453.0	50 pcs	**134**
93.420.0653.0	100 pcs	**134**
93.420.4553.0	100 pcs	**134**
93.420.4653.0	100 pcs	**134**
93.420.5453.0	5 pcs	**148**
93.421.0353.1	100 pcs	**133**
93.421.0553.1	50 pcs	**132**
93.421.0653.1	100 pcs	**133**
93.421.4353.1	100 pcs	**133**
93.421.4553.1	50 pcs	**132**
93.421.4653.1	100 pcs	**133**
93.421.5453.0	5 pcs	**149**
93.422.0353.1	100 pcs	**133**
93.422.0553.1	50 pcs	**132**
93.422.0653.1	100 pcs	**133**
93.422.4353.1	100 pcs	**133**
93.422.4553.1	50 pcs	**132**
93.422.4653.1	100 pcs	**133**
93.430.2053.0	50 pcs	**140**
93.430.2053.1	50 pcs	**140**
93.430.2453.0	50 pcs	**140**
93.430.2453.1	50 pcs	**140**
93.430.2653.0	100 pcs	**140**
93.430.2653.1	100 pcs	**140**
93.431.2353.0	100 pcs	**139**
93.431.2353.1	100 pcs	**139**
93.431.2553.0	50 pcs	**138**
93.431.2553.1	50 pcs	**138**
93.431.2653.0	100 pcs	**139**
93.431.2653.1	100 pcs	**139**
93.432.2353.0	100 pcs	**139**
93.432.2353.1	100 pcs	**139**
93.432.2553.0	50 pcs	**138**
93.432.2553.1	50 pcs	**138**
93.432.2653.0	100 pcs	**139**
93.432.2653.1	100 pcs	**139**
94.425.1000.7	100 pcs	**135**
94.425.1000.9	100 pcs	**135**
94.425.1003.7	100 pcs	**136**
94.425.1003.9	100 pcs	**136**
94.425.1004.7	100 pcs	**137**
94.425.1004.9	100 pcs	**137**
94.425.1030.9	150 pcs	**135**
94.425.1033.9	150 pcs	**136**
94.425.1034.9	150 pcs	**137**
94.425.1050.7	100 pcs	**135**
94.425.1053.7	100 pcs	**136**
94.425.1054.7	100 pcs	**137**
94.425.1060.7	100 pcs	**135**
94.425.1063.7	100 pcs	**136**
94.425.1064.7	100 pcs	**137**
94.425.1090.9	150 pcs	**135**
94.425.1093.9	150 pcs	**136**
94.425.1094.9	150 pcs	**137**
94.425.2000.7	50 pcs	**135**
94.425.2000.9	50 pcs	**135**
94.425.2003.7	50 pcs	**136**
94.425.2003.9	50 pcs	**136**
94.425.2004.7	50 pcs	**137**
94.425.2004.9	50 pcs	**137**
94.425.2030.9	75 pcs	**135**
94.425.2033.9	75 pcs	**136**
94.425.2034.9	75 pcs	**137**
94.425.2050.7	50 pcs	**135**
94.425.2053.7	50 pcs	**136**
94.425.2054.7	50 pcs	**137**
94.425.2060.7	50 pcs	**135**
94.425.2063.7	50 pcs	**136**
94.425.2064.7	50 pcs	**137**
94.425.2090.9	75 pcs	**135**
94.425.2093.9	75 pcs	**136**
94.425.2094.9	75 pcs	**137**
94.425.3000.7	30 pcs	**135**
94.425.3000.9	30 pcs	**135**
94.425.3003.7	30 pcs	**136**
94.425.3003.9	30 pcs	**136**
94.425.3004.7	30 pcs	**137**
94.425.3004.9	30 pcs	**137**
94.425.3030.9	50 pcs	**135**
94.425.3033.9	50 pcs	**136**
94.425.3034.9	50 pcs	**137**
94.425.3050.7	30 pcs	**135**
94.425.3053.7	30 pcs	**136**
94.425.3054.7	30 pcs	**137**
94.425.3060.7	30 pcs	**135**
94.425.3060.9	30 pcs	**135**
94.425.3063.7	30 pcs	**136**
94.425.3063.9	30 pcs	**136**
94.425.3064.7	30 pcs	**137**
94.425.3090.9	50 pcs	**135**
94.425.3093.9	50 pcs	**136**
94.425.3094.9	50 pcs	**137**
94.425.4000.7	30 pcs	**135**
94.425.4000.9	30 pcs	**135**
94.425.4003.7	30 pcs	**136**
94.425.4003.9	30 pcs	**136**
94.425.4004.7	30 pcs	**137**
94.425.4004.9	30 pcs	**137**
94.425.4030.9	30 pcs	**135**
94.425.4033.9	30 pcs	**136**
94.425.4034.9	30 pcs	**137**
94.425.4050.7	30 pcs	**135**
94.425.4053.7	30 pcs	**136**
94.425.4054.7	30 pcs	**137**
94.425.4060.7	30 pcs	**135**
94.425.4063.7	30 pcs	**136**
94.425.4064.7	30 pcs	**137**
94.425.4090.9	30 pcs	**135**
94.425.4094.9	30 pcs	**137**
94.425.5000.7	20 pcs	**135**
94.425.5000.9	20 pcs	**135**
94.425.5003.7	20 pcs	**136**
94.425.5003.9	20 pcs	**136**
94.425.5004.7	20 pcs	**137**
94.425.5004.9	20 pcs	**137**
94.425.5030.9	25 pcs	**135**
94.425.5033.9	25 pcs	**136**
94.425.5034.9	25 pcs	**137**
94.425.5050.7	20 pcs	**135**
94.425.5053.7	20 pcs	**136**
94.425.5054.7	20 pcs	**137**
94.425.5060.7	20 pcs	**135**
94.425.5060.9	20 pcs	**135**
94.425.5063.7	20 pcs	**136**
94.425.5064.7	20 pcs	**137**
94.425.5090.9	25 pcs	**135**
94.425.5093.9	25 pcs	**136**
94.425.5094.9	25 pcs	**137**
94.425.6000.7	20 pcs	**135**
94.425.6000.9	20 pcs	**135**
94.425.6003.7	20 pcs	**136**
94.425.6003.9	20 pcs	**136**
94.425.6004.7	20 pcs	**137**
94.425.6030.9	25 pcs	**135**
94.425.6033.9	25 pcs	**136**
94.425.6034.9	25 pcs	**137**
94.425.6050.7	20 pcs	**135**
94.425.6053.7	20 pcs	**136**
94.425.6054.7	20 pcs	**137**
94.425.6060.7	20 pcs	**135**
94.425.6063.7	20 pcs	**136**
94.425.6064.7	20 pcs	**137**
94.425.6090.9	25 pcs	**135**
94.425.6093.9	25 pcs	**136**
94.425.6094.9	25 pcs	**137**
94.425.7000.7	15 pcs	**135**
94.425.7000.9	15 pcs	**135**
94.425.7003.7	15 pcs	**136**
94.425.7003.9	15 pcs	**136**
94.425.7004.7	15 pcs	**137**
94.425.7030.9	20 pcs	**135**
94.425.7034.9	20 pcs	**137**
94.425.7050.7	15 pcs	**135**
94.425.7053.7	15 pcs	**136**
94.425.7054.7	15 pcs	**137**
94.425.7060.7	15 pcs	**135**
94.425.7063.7	15 pcs	**136**
94.425.7064.7	15 pcs	**137**
94.425.7090.9	20 pcs	**135**
94.425.7093.9	20 pcs	**136**
94.425.7094.9	20 pcs	**137**
94.425.8000.7	15 pcs	**135**
94.425.8000.9	15 pcs	**135**
94.425.8003.7	15 pcs	**136**
94.425.8003.9	15 pcs	**136**
94.425.8004.7	15 pcs	**137**
94.425.8030.9	20 pcs	**135**
94.425.8033.9	20 pcs	**136**
94.425.8034.9	20 pcs	**137**
94.425.8050.7	15 pcs	**135**
94.425.8053.7	15 pcs	**136**
94.425.8054.7	15 pcs	**137**
94.425.8060.7	15 pcs	**135**
94.425.8063.7	15 pcs	**136**
94.425.8064.7	15 pcs	**137**
94.425.8090.9	20 pcs	**135**
94.425.8093.9	20 pcs	**136**
94.425.8094.9	20 pcs	**137**
94.435.1000.1	100 pcs	**141**
94.435.1003.1	100 pcs	**141**
94.435.1004.1	100 pcs	**142**
94.435.1060.1	100 pcs	**141**
94.435.1064.1	100 pcs	**142**
94.435.2000.1	50 pcs	**141**
94.435.2003.1	50 pcs	**141**
94.435.2004.1	50 pcs	**142**
94.435.2060.1	50 pcs	**141**
94.435.2064.1	50 pcs	**142**
94.435.3000.1	30 pcs	**141**
94.435.3003.1	30 pcs	**141**
94.435.3004.1	30 pcs	**142**
94.435.3060.1	30 pcs	**141**

INDEX

PART NUMBER | PU | PAGE

94.435.3064.1	30 pcs	142
94.435.4000.1	30 pcs	141
94.435.4003.1	30 pcs	141
94.435.4004.1	30 pcs	142
94.435.4060.1	30 pcs	141
94.435.4064.1	30 pcs	142
94.435.5000.1	20 pcs	141
94.435.5003.1	20 pcs	141
94.435.5004.1	20 pcs	142
94.435.5060.1	20 pcs	141
94.435.6000.1	20 pcs	141
94.435.6003.1	20 pcs	141
94.435.6004.1	20 pcs	142
94.435.6060.1	20 pcs	141
94.435.6064.1	20 pcs	142
94.435.7000.1	15 pcs	141
94.435.7004.1	15 pcs	142
94.435.7060.1	15 pcs	141
94.435.8000.1	15 pcs	141
94.435.8003.1	15 pcs	141
94.435.8004.1	15 pcs	142
94.435.8060.1	15 pcs	141
94.435.8064.1	15 pcs	142
95.300.0600.0	1 pc	151
99.004.8210.0	200 pcs	75
99.005.8210.0	200 pcs	75
99.157.0028.0	1 pc	52
99.188.0028.0	1 pc	15
99.189.0028.0	1 pc	15
99.201.0028.0	24 pcs	15
99.202.0028.0	24 pcs	15
99.220.0028.0	24 pcs	51
99.234.0028.0	24 pcs	15
99.237.0028.0	24 pcs	52
99.238.0028.0	24 pcs	15
99.246.0028.0	12 pcs	52
99.279.0028.0	24 pcs	15
99.281.0028.0	24 pcs	52
99.293.0028.0	24 pcs	15
99.294.0028.0	24 pcs	15
99.297.0028.0	24 pcs	15
99.300.0028.0	24 pcs	15
99.308.0028.0	24 pcs	15
99.317.0028.0	24 pcs	15
99.323.0028.0	24 pcs	52
99.324.0028.0	24 pcs	52
99.326.0028.0	24 pcs	52
99.400.1574.0	50 pcs	111
99.400.5623.1	50 pcs	18
99.401.1574.0	10 pcs	111
99.410.0000.1	8 pcs	77
99.411.0028.0	30 pcs	71
99.412.0028.0	20 pcs	71
99.413.0000.8	280 pcs	119
99.413.0028.0	10 pcs	71
99.414.0028.0	10 pcs	71
99.415.0000.8	125 pcs	122
99.415.0028.0	8 pcs	71
99.416.0028.0	5 pcs	71
99.417.0028.0	5 pcs	71
99.418.0028.0	5 pcs	71
99.419.0000.8	280 pcs	119
99.428.0000.8	125 pcs	123
99.431.0028.0	30 pcs	71
99.432.0028.0	20 pcs	71
99.433.0028.0	10 pcs	71
99.434.0028.0	10 pcs	71
99.435.0028.0	8 pcs	71
99.436.0028.0	5 pcs	71
99.437.0028.0	5 pcs	71
99.438.0028.0	5 pcs	71
99.450.0000.8	100 pcs	124
99.451.0000.8	100 pcs	129
99.451.0028.0	30 pcs	72
99.452.0028.0	20 pcs	72
99.452.9910.0	100 pcs	16
99.453.0028.0	10 pcs	72
99.453.9910.0	100 pcs	37
99.454.0028.0	10 pcs	72
99.455.0028.0	8 pcs	72
99.455.9910.0	50 pcs	25
99.456.0028.0	5 pcs	72
99.457.0028.0	5 pcs	72
99.458.0028.0	5 pcs	72
99.482.9910.0	100 pcs	156
99.502.0028.0	25 pcs	37
99.503.0028.0	1 pc	15
99.508.0028.0	50 pcs	76
99.600.0028.0	1 pc	76
99.601.0028.0	25 pcs	76
99.602.0028.0	1 pc	76
99.612.0028.0	1 pc	76
99.640.0000.0	25 pcs	96
99.641.0000.0	25 pcs	96
99.642.0000.0	25 pcs	96
99.643.0000.0	20 pcs	96
99.652.0028.0	1 pc	76
99.653.0028.0	1 pc	76
99.668.0000.0	15 pcs	96
G0.501.0105.8	20 pcs	111
G0.501.0105.9	15 pcs	111
G0.501.0106.0	10 pcs	111
G1.033.0104.6		160
G1.033.0204.6		160
G1.033.0304.6		160
G1.033.0404.6		160
G1.033.0504.6		160
G1.033.0604.6		160
G1.033.0704.6		160
G1.033.0804.6		160
G1.044.0102.1		167
G1.044.0102.2		167
G1.044.0103.1		169
G1.044.0103.2		169
G1.044.0202.1		167
G1.044.0202.2		167
G1.044.0203.1		169
G1.044.0203.2		169
G1.044.0302.1		167
G1.044.0302.2		167
G1.044.0303.1		169
G1.044.0303.2		169
G1.044.0402.1		167
G1.044.0402.2		167
G1.044.0403.1		169
G1.044.0403.2		169
G1.044.0502.1		167
G1.044.0502.2		167
G1.044.0503.1		169
G1.044.0503.2		169
G1.044.0602.1		167
G1.044.0602.2		167
G1.044.0603.1		169
G1.044.0603.2		169
G1.044.0702.1		167
G1.044.0702.2		167
G1.044.0703.1		169
G1.044.0703.2		169
G1.044.0802.1		167
G1.044.0802.2		167
G1.044.0803.1		169
G1.044.0803.2		169
G1.055.0102.1		174
G1.055.0102.7		174
G1.055.0202.1		174
G1.055.0202.7		174
G1.055.0302.1		174
G1.055.0302.7		174
G1.055.0402.1		174
G1.055.0402.7		174
G1.055.0502.1		174
G1.055.0502.7		174
G1.055.0702.1		174
G1.055.0702.7		174
G1.055.1002.1		174
G1.055.1002.7		174
G1.066.0102.7		180
G1.066.0202.7		180
G1.066.0302.7		180
G1.066.0402.7		180
G1.066.0502.7		180
G1.066.0602.7		180
G1.066.0702.7		180
G1.066.1002.7		180
G1.130.3813.1		159
G1.130.3823.1		159
G1.130.3823.1		159
G1.132.4403.1		159
G1.140.4813.1		166
G1.140.4813.1		166
G1.141.1300.1		166
G1.142.4403.1		166
G1.161.1300.1		179
G1.162.6603.1		179
G1.162.6603.7		179
G1.333.0104.6		160
G1.333.0204.6		160
G1.333.0304.6		160
G1.333.0404.6		160
G1.333.0504.6		160
G1.333.0604.6		160
G1.333.0704.6		160
G1.333.0804.6		160
G1.344.0102.1		167
G1.344.0102.2		167
G1.344.0103.1		169
G1.344.0103.2		169
G1.344.0202.1		167
G1.344.0202.2		167
G1.344.0203.1		169
G1.344.0203.2		169
G1.344.0302.1		167
G1.344.0302.2		167
G1.344.0303.1		169
G1.344.0303.2		169
G1.344.0402.1		167
G1.344.0402.2		167
G1.344.0403.1		169
G1.344.0403.2		169
G1.344.0502.1		167
G1.344.0502.2		167
G1.344.0503.1		169
G1.344.0503.2		169
G1.344.0602.1		167
G1.344.0602.2		167
G1.344.0603.1		169
G1.344.0603.2		169
G1.344.0702.1		167
G1.344.0702.2		167
G1.344.0703.1		169
G1.344.0703.2		169
G1.344.0802.1		167
G1.344.0802.2		167
G1.344.0803.1		169
G1.344.0803.2		169
G1.355.0102.1		174
G1.355.0102.7		174
G1.355.0202.1		174
G1.355.0202.7		174
G1.355.0302.1		174
G1.355.0302.7		174
G1.355.0402.1		174
G1.355.0402.7		174
G1.355.0502.1		174
G1.355.0502.7		174
G1.355.0702.1		174
G1.355.0702.7		174
G1.355.1002.1		174
G1.355.1002.7		174
G1.366.0102.7		180
G1.366.0202.7		180
G1.366.0302.7		180
G1.366.0402.7		180
G1.366.0502.7		180
G1.366.0602.7		180
G1.366.0702.7		180
G1.366.1002.7		180
G1.433.0104.6		161
G1.433.0204.6		161
G1.433.0304.6		161
G1.433.0404.6		161
G1.433.0504.6		161
G1.433.0604.6		161
G1.433.0704.6		161
G1.433.0804.6		161
G1.444.0102.1		168
G1.444.0102.2		168
G1.444.0103.1		170
G1.444.0103.2		170
G1.444.0202.1		168
G1.444.0202.2		168
G1.444.0203.1		170
G1.444.0203.2		170
G1.444.0302.1		168
G1.444.0302.2		168
G1.444.0303.1		170
G1.444.0303.2		170
G1.444.0402.1		168
G1.444.0402.2		168
G1.444.0403.1		170
G1.444.0403.2		170
G1.444.0502.1		168
G1.444.0502.2		168
G1.444.0503.1		170
G1.444.0503.2		170
G1.444.0602.1		168
G1.444.0602.2		168
G1.444.0603.1		170
G1.444.0603.2		170
G1.444.0702.1		168
G1.444.0702.2		168
G1.444.0703.1		170
G1.444.0703.2		170
G1.444.0802.1		168
G1.444.0802.2		168
G1.444.0803.1		170
G1.444.0803.2		170
G1.455.0102.1		175
G1.455.0102.7		175
G1.455.0202.1		175

INDEX

PART NUMBER | PU | PAGE

G1.455.0202.7		**175**
G1.455.0302.1		**175**
G1.455.0302.7		**175**
G1.455.0402.1		**175**
G1.455.0402.7		**175**
G1.455.0502.1		**175**
G1.455.0502.7		**175**
G1.455.0702.1		**175**
G1.455.0702.7		**175**
G1.455.1002.1		**175**
G1.455.1002.7		**175**
G1.466.0102.7		**181**
G1.466.0202.7		**181**
G1.466.0302.7		**181**
G1.466.0402.7		**181**
G1.466.0502.7		**181**
G1.466.0602.7		**181**
G1.466.0702.7		**181**
G1.466.1002.7		**181**
G1.830.0012.1		**158**
G1.830.0042.1		**158**
G1.830.0062.1		**158**
G1.833.0412.1		**157**
G1.834.0442.1		**157**
G1.840.0012.1		**165**
G1.840.0042.1		**165**
G1.840.0062.1		**165**
G1.843.0412.1		**163**
G1.843.0422.1		**163**
G1.844.0442.1		**163**
G1.845.0432.2		**164**
G1.845.0472.2		**164**
G1.860.0042.7		**178**
G1.933.0502.2	75 pcs	**156**
G1.943.0542.1		**162**
G1.944.0542.1		**162**
G1.952.0542.7		**172**
G1.953.0542.1		**172**
G1.953.0542.7		**172**
G1.955.0542.1		**172**
G1.955.0542.7		**172**
G1.962.0542.9		**176**
G1.963.0542.9		**176**
G1.964.0542.9		**176**
G1.965.0542.9		**177**
G1.966.0000.7		**178**
G1.966.0542.9		**177**
G3.032.0102.1	50 pcs	**19**
G3.032.0102.2	50 pcs	**19**
G3.032.0103.1	40 pcs	**26**
G3.032.0103.2	40 pcs	**26**
G3.032.0202.1	25 pcs	**19**
G3.032.0202.2	25 pcs	**19**
G3.032.0203.1	20 pcs	**26**
G3.032.0203.2	20 pcs	**26**
G3.032.0302.1	20 pcs	**19**
G3.032.0302.2	20 pcs	**19**
G3.032.0303.1	15 pcs	**26**
G3.032.0303.2	15 pcs	**26**
G3.032.0402.1	15 pcs	**19**
G3.032.0402.2	15 pcs	**19**
G3.032.0403.1	10 pcs	**26**
G3.032.0403.2	10 pcs	**26**
G3.032.0502.1	10 pcs	**19**
G3.032.0502.2	10 pcs	**19**
G3.032.0503.1	10 pcs	**26**
G3.032.0503.2	10 pcs	**26**
G3.032.0602.1	10 pcs	**19**
G3.032.0602.2	10 pcs	**19**
G3.032.0603.1	8 pcs	**26**
G3.032.0603.2	8 pcs	**26**
G3.032.0702.1	8 pcs	**19**
G3.032.0702.2	8 pcs	**19**
G3.032.0703.1	5 pcs	**26**
G3.032.0703.2	5 pcs	**26**
G3.032.0802.1	8 pcs	**19**
G3.032.0802.2	8 pcs	**19**
G3.032.0803.1	5 pcs	**26**
G3.032.0803.2	5 pcs	**26**
G3.332.0102.1	50 pcs	**21**
G3.332.0102.2	50 pcs	**21**
G3.332.0103.1	40 pcs	**28**
G3.332.0103.2	40 pcs	**28**
G3.332.0202.1	25 pcs	**21**
G3.332.0203.1	25 pcs	**28**
G3.332.0203.2	25 pcs	**28**
G3.332.0302.1	20 pcs	**21**
G3.332.0302.2	20 pcs	**21**
G3.332.0303.1	20 pcs	**28**
G3.332.0303.2	20 pcs	**28**
G3.332.0402.1	15 pcs	**21**
G3.332.0402.2	15 pcs	**21**
G3.332.0403.1	10 pcs	**28**
G3.332.0502.1	10 pcs	**21**
G3.332.0502.2	10 pcs	**21**
G3.332.0503.1	10 pcs	**28**
G3.332.0503.2	10 pcs	**28**
G3.332.0602.1	10 pcs	**21**
G3.332.0602.2	10 pcs	**21**
G3.332.0702.1	8 pcs	**21**
G3.332.0702.2	8 pcs	**21**
G3.332.0703.1	5 pcs	**28**
G3.332.0703.2	5 pcs	**28**
G3.332.0802.1	8 pcs	**21**
G3.332.0802.2	8 pcs	**21**
G3.332.0803.1	5 pcs	**28**
G3.432.0102.1	50 pcs	**23**
G3.432.0102.2	50 pcs	**23**
G3.432.0103.1	40 pcs	**30**
G3.432.0103.2	40 pcs	**30**
G3.432.0202.1	25 pcs	**23**
G3.432.0203.1	20 pcs	**30**
G3.432.0302.1	20 pcs	**23**
G3.432.0302.2	20 pcs	**23**
G3.432.0303.1	15 pcs	**30**
G3.432.0303.2	15 pcs	**30**
G3.432.0402.1	15 pcs	**23**
G3.432.0403.1	10 pcs	**30**
G3.432.0403.2	10 pcs	**30**
G3.432.0502.1	10 pcs	**23**
G3.432.0503.1	10 pcs	**30**
G3.432.0503.2	10 pcs	**30**
G3.432.0602.1	10 pcs	**23**
G3.432.0603.1	8 pcs	**30**
G3.432.0603.2	8 pcs	**30**
G3.432.0703.1	5 pcs	**30**
G3.432.0703.2	5 pcs	**30**
G3.432.0802.1	8 pcs	**23**
G3.432.0803.1	5 pcs	**30**
G5.031.0203.3		**182**
G5.031.0204.3		**182**
G5.031.0206.1		**182**
G5.031.0303.3		**182**
G5.031.0304.3		**182**
G5.031.0306.1		**182**
G5.031.0503.3		**182**
G5.031.0504.3		**182**
G5.031.0506.1		**182**
G5.031.0703.3		**182**
G5.031.0704.3		**182**
G5.031.0706.1		**182**
G5.031.0903.3		**182**
G5.031.0904.3		**182**
G5.031.0906.1		**182**
G5.031.1103.3		**182**
G5.031.1104.3		**182**
G5.031.1106.1		**182**
G5.031.1303.3		**182**
G5.031.1304.3		**182**
G5.031.1306.1		**182**
G5.031.1503.3		**182**
G5.031.1504.3		**182**
G5.031.1506.1		**182**
G5.036.0204.3		**185**
G5.036.0304.3		**185**
G5.036.0504.3		**185**
G5.036.0704.3		**185**
G5.036.0904.3		**185**
G5.036.1104.3		**185**
G5.036.1304.3		**185**
G5.036.1504.3		**185**
G5.041.0203.4		**182**
G5.041.0204.2		**182**
G5.041.0204.4		**182**
G5.041.0303.4		**182**
G5.041.0304.2		**182**
G5.041.0304.4		**182**
G5.041.0503.4		**182**
G5.041.0504.2		**182**
G5.041.0504.4		**182**
G5.041.0703.4		**182**
G5.041.0704.2		**182**
G5.041.0704.4		**182**
G5.041.0903.4		**182**
G5.041.0904.2		**182**
G5.041.0904.4		**182**
G5.041.1103.4		**182**
G5.041.1104.2		**182**
G5.041.1104.4		**182**
G5.041.1303.4		**182**
G5.041.1304.2		**182**
G5.041.1304.4		**182**
G5.041.1503.4		**182**
G5.041.1504.2		**182**
G5.041.1504.4		**182**
G5.046.0204.C		**185**
G5.046.0304.C		**185**
G5.046.0504.C		**185**
G5.046.0704.C		**185**
G5.046.0904.C		**185**
G5.046.1104.C		**185**
G5.046.1304.C		**185**
G5.046.1504.C		**185**
G5.051.0203.5		**182**
G5.051.0203.7		**182**
G5.051.0303.5		**182**
G5.051.0303.7		**182**
G5.051.0503.5		**182**
G5.051.0503.7		**182**
G5.051.0703.5		**182**
G5.051.0703.7		**182**
G5.051.0903.5		**182**
G5.051.0903.7		**182**
G5.051.1103.5		**182**
G5.051.1103.7		**182**
G5.051.1303.5		**182**
G5.051.1303.7		**182**
G5.051.1503.5		**182**
G5.051.1503.7		**182**
G5.061.0203.6		**182**
G5.061.0203.8		**182**
G5.061.0303.6		**182**
G5.061.0303.8		**182**
G5.061.0503.6		**182**
G5.061.0503.8		**182**
G5.061.0703.6		**182**
G5.061.0703.8		**182**
G5.061.0903.6		**182**
G5.061.0903.8		**182**
G5.061.1103.6		**182**
G5.061.1103.8		**182**
G5.061.1303.6		**182**
G5.061.1303.8		**182**
G5.061.1503.6		**182**
G5.061.1503.8		**182**
G5.331.0203.3		**183**
G5.331.0204.3		**183**
G5.331.0206.1		**183**
G5.331.0303.3		**183**
G5.331.0304.3		**183**
G5.331.0306.1		**183**
G5.331.0503.3		**183**
G5.331.0504.3		**183**
G5.331.0506.1		**183**
G5.331.0703.3		**183**
G5.331.0704.3		**183**
G5.331.0706.1		**183**
G5.331.0903.3		**183**
G5.331.0904.3		**183**
G5.331.0906.1		**183**
G5.331.1103.3		**183**
G5.331.1104.3		**183**
G5.331.1106.1		**183**
G5.331.1303.3		**183**
G5.331.1304.3		**183**
G5.331.1306.1		**183**
G5.331.1503.3		**183**
G5.331.1504.3		**183**
G5.331.1506.1		**183**
G5.341.0203.4		**183**
G5.341.0204.2		**183**
G5.341.0204.4		**183**
G5.341.0303.4		**183**
G5.341.0304.2		**183**
G5.341.0304.4		**183**
G5.341.0503.4		**183**
G5.341.0504.2		**183**
G5.341.0504.4		**183**
G5.341.0703.4		**183**
G5.341.0704.2		**183**
G5.341.0704.4		**183**
G5.341.0903.4		**183**
G5.341.0904.2		**183**
G5.341.0904.4		**183**
G5.341.1103.4		**183**
G5.341.1104.2		**183**
G5.341.1104.4		**183**
G5.341.1303.4		**183**
G5.341.1304.2		**183**
G5.341.1304.4		**183**
G5.341.1503.4		**183**
G5.341.1504.2		**183**
G5.341.1504.4		**183**
G5.351.0203.5		**183**
G5.351.0203.7		**183**
G5.351.0303.5		**183**
G5.351.0303.7		**183**
G5.351.0503.5		**183**
G5.351.0503.7		**183**
G5.351.0703.5		**183**

INDEX

PART NUMBER | PU | PAGE

G5.351.0703.7		183
G5.351.0903.5		183
G5.351.0903.7		183
G5.351.1103.5		183
G5.351.1103.7		183
G5.351.1303.5		183
G5.351.1303.7		183
G5.351.1503.5		183
G5.351.1503.7		183
G5.361.0203.6		183
G5.361.0203.8		183
G5.361.0303.6		183
G5.361.0303.8		183
G5.361.0503.6		183
G5.361.0503.8		183
G5.361.0703.6		183
G5.361.0703.8		183
G5.361.0903.6		183
G5.361.0903.8		183
G5.361.1103.6		183
G5.361.1103.8		183
G5.361.1303.6		183
G5.361.1303.8		183
G5.361.1503.6		183
G5.361.1503.8		183
G5.431.0203.3		184
G5.431.0204.3		184
G5.431.0206.1		184
G5.431.0303.3		184
G5.431.0304.3		184
G5.431.0306.1		184
G5.431.0503.3		184
G5.431.0504.3		184
G5.431.0506.1		184
G5.431.0703.3		184
G5.431.0704.3		184
G5.431.0706.1		184
G5.431.0903.3		184
G5.431.0904.3		184
G5.431.0906.1		184
G5.431.1103.3		184
G5.431.1104.3		184
G5.431.1106.1		184
G5.431.1303.3		184
G5.431.1304.3		184
G5.431.1306.1		184
G5.431.1503.3		184
G5.431.1504.3		184
G5.431.1506.1		184
G5.441.0203.4		184
G5.441.0204.2		184
G5.441.0204.4		184
G5.441.0303.4		184
G5.441.0304.2		184
G5.441.0304.4		184
G5.441.0503.4		184
G5.441.0504.2		184
G5.441.0504.4		184
G5.441.0703.4		184
G5.441.0704.2		184
G5.441.0704.4		184
G5.441.0903.4		184
G5.441.0904.2		184
G5.441.0904.4		184
G5.441.1103.4		184
G5.441.1104.2		184
G5.441.1104.4		184
G5.441.1303.4		184
G5.441.1304.2		184
G5.441.1304.4		184
G5.441.1503.4		184
G5.441.1504.2		184
G5.441.1504.4		184
G5.451.0203.5		184
G5.451.0203.7		184
G5.451.0303.5		184
G5.451.0303.7		184
G5.451.0503.5		184
G5.451.0503.7		184
G5.451.0703.5		184
G5.451.0703.7		184
G5.451.0903.5		184
G5.451.0903.7		184
G5.451.1103.5		184
G5.451.1103.7		184
G5.451.1303.5		184
G5.451.1303.7		184
G5.451.1503.5		184
G5.451.1503.7		184
G5.456.0203.5		185
G5.456.0303.5		185
G5.456.0503.5		185
G5.456.0703.5		185
G5.456.0903.5		185
G5.456.1103.5		185
G5.456.1303.5		185
G5.456.1503.5		185
G5.461.0203.6		184
G5.461.0203.8		184
G5.461.0303.6		184
G5.461.0303.8		184
G5.461.0503.6		184
G5.461.0503.8		184
G5.461.0703.6		184
G5.461.0703.8		184
G5.461.0903.6		184
G5.461.0903.8		184
G5.461.1103.6		184
G5.461.1103.8		184
G5.461.1303.6		184
G5.461.1303.8		184
G5.461.1503.6		184
G5.461.1503.8		184
G5.536.0103.1		189
G5.536.0103.3		189
G5.536.0203.1		189
G5.536.0203.3		189
G5.800.0023.5		189
G5.800.0023.7		189
G5.800.0044.4		189
G5.800.0044.6		189
G5.800.0063.4		189
G5.800.0063.6		189
G5.926.0542.5		188
G5.926.1042.5		188
G5.926.1542.5		188
G5.926.2042.5		188
G5.931.0503.3		187
G5.931.0504.3		187
G5.931.0593.3		186
G5.931.0594.1		186
G5.931.0594.3		186
G5.931.0596.1		186
G5.931.1093.3		186
G5.931.1094.1		186
G5.931.1094.3		186
G5.931.1096.1		186
G5.931.1593.3		186
G5.931.1594.3		186
G5.931.2093.3		186
G5.931.2094.3		186
G5.931.3093.3		186
G5.931.3094.3		186
G5.931.4093.3		186
G5.931.4094.3		186
G5.931.5093.3		186
G5.931.5094.3		186
G5.936.0542.3		188
G5.936.1042.3		188
G5.936.1542.3		188
G5.941.0504.C		187
G5.941.0593.4		186
G5.941.1094.4		186
G5.941.1594.4		186
G5.941.2094.4		186
G5.941.3094.4		186
G5.941.4094.4		186
G5.946.0542.4		188
G5.946.1042.4		188
G5.946.1542.4		188
G5.951.0502.5		187
G5.951.1002.5		187
G5.951.1502.5		187
G5.956.0542.5		188
G5.956.1042.5		188
G5.956.1542.5		188
G5.961.0592.8		186
G5.961.1092.8		186
G5.961.1592.8		186
G5.966.0542.6		188
G5.966.1042.6		188
G5.966.1542.6		188
Z5.566.5750.0	50 pcs	73
Z6.563.5700.0	2 pcs	152

OUR **SECTOR KNOWLEDGE.**

We have developed special industry knowledge in a wide variety of specialized fields. This forms the basis of our successful solutions.

- Machine and system construction
- Building installation
- Heating, ventilation and air conditioning systems
- Light technology
- Combustion technology
- Conveying technology
- Wind power and photovoltaics
- Lifts and escalators

OUR **SOLUTIONS** RANGE

for pluggable building installation.

gesis® NRG flat cable
for energy distribution
and lighting control

GST15 and GST18®
Pluggable electrical installa-
tion for indoor applications

gesis® ELECTRONIC
Decentralized room auto-
mation, modular and pluggable

RST® MICRO, MINI, CLASSIC
Pluggable electrical installa-
tion for outdoor applications

gesis®
Pluggable system
components

System distributors,
distributor boxes

INFO **TO GO.**

All brochures from Wieland Electric
are available for download on our website.

https://www.wieland-electric.com/en/support/downloads

Interesting for you

DISTRIBUTION BOXES
Customized solutions
Part No. 0702.1

GESIS® ELECTRONIC
Decentralized building automation
with plug & play
Part No. 0700.1

HELLO BUILDING
Innovative power and
signal distribution
Part No. 0431.1

Wieland @YouTube
See our solutions
in motion

https://www.youtube.com/user/WielandElectric

Technical consultation
Building and
installation technology

Phone: **+49 951 9324-996**
Email: **building@wieland-electric.com**

ONLY **ONE TIP** AWAY.

Scan QR code –
view products in the
E-SHOP.

OUR WIELAND E-SHOP
Over 25,000 products - anytime

In our online store you will find
all the information about our products,
prices, and technical data.

Order easily and conveniently online,
and check availability.

https://eshop.wieland-electric.com

wieland

HEADQUARTERS

Wieland Electric GmbH
Brennerstraße 10 – 14
96052 Bamberg · Germany

Phone +49 951 9324-0
Fax +49 951 9324-198
info@wieland-electric.com

0670.1 K AB-BA

Represented in over 70 countries worldwide:

www.**wieland**-electric.com